i

EN Applications by part numbers

DE Produktübersicht

FR Programe de livraison

IT Applicazione per codice

Notes/Legende/Observations/Nota

	E	D	F	I
AC	AC motor	AC Motor	AC moteur	Motore AC
BLMP	BLMP motor	BLMP Motor	BLMP moteur	Motore BLMP
DC	DC motor	DC Motor	DC moteur	Motore DC
F	Flange	Flansch	Bride	Flangia
G	Grounded	Masse	A la masse	Non isolato
H	Hydraulics	Hydraulik	Hydraulique	Idraulica
HD	Heavy duty	Schwere Ausführung (LKW/NKW)	Grande puissance	Heavy duty
IG	Insulated ground	Isolierte Masse	Masse isolée	Isolato
IP	Basic protection	Schutzart	Protection	Protezione
O	Other	Andere	Autre	Altro
OP	Operation	Funktionsart	Opération	Tempo di servizio
RO	Rotation	Drehrichtung	Sens de rotation	Rotazione
RPM	No. of revolutions	Umdrehungen	Nombre te tour/minute	Numero giri
T	Traction	Traktion	Traction	Trazione
TP	Termo protection	Thermoschutz	Protection thermique	Protezione termica
TY	Type	Typ	Type	Tipo
VT	Ventilation	Belüftung	Ventilation	Autoventilato

Installation guide/Einbauanleitung/Guide d'installation/Istruzioni per il montaggio.

1. Electrical system check:

Before you decide to replace electrical motor, it is in your own interest to check the following:

- Is the battery charged and in good condition?
- Are the battery cables correctly connected and are not damaged?
- Are all electrical connections properly tightened and not corroded?
- Is electrical harness correctly made and not damaged?

2. Disconnection of the vehicle battery - warning:

- Disconnecting the battery may result in codes being lost on some vehicle systems. The systems must then be or re-programmed or the codes re-entered.
- Before disconnecting the battery follow the vehicle manufacturer recommended procedures.

3. Installation steps:

3.1 Ensure that all power-transmitting components and connections (electric, pneumatic, hydraulic) are switched off according to the manufacturer's notes and cannot be switched on again. If possible, remove the main fuse on the machine or system.

Disconnect the negative battery cable first, to prevent short circuits to ground.

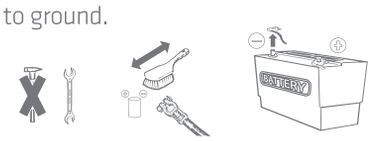

3.2 Remove the electrical connecting cables from the existing electrical motor. Use extreme care and properly mark the connecting cables according to electrical motor output terminals.

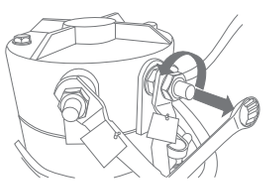

3.3 Depending from the application the electrical motor can be used as pump motor or as traction motor. In both cases loosen the mounting bolts of and remove the electric motor from pump unit or gear unit.

Follow the recommended procedures of the machine or system manufacturer.

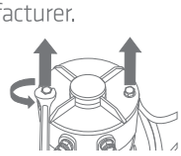

3.4 Check that the electrical motor you are installing is identical to the removed motor. Check the electrical motor part number in catalogue, direction of rotation, rated voltage, rated current, installation dimensions, electrical connection terminals...

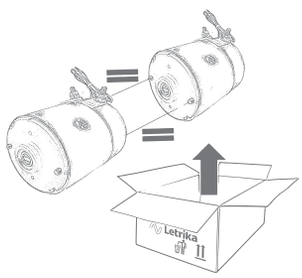

3.5 Check the following:

- Ensure that the engine cannot switch on.
- The protective cover and plastic plugs are to be removed with a suitable tool.
- Take care not to damage any sealing surfaces.
- When working with hydraulic fluids strictly observe the safety notes provided by the hydraulic fluid manufacturer.
- Please follow the notes of the machine or system manufacturer.

3.6 Tighten the electrical motor fixing screws evenly and to the correct torque. Incorrect torques can result in malfunctions, leakage and in increased wear.

3.7 Fix the electrical motor at the installation location. If necessary, details on the required tools and tightening torques for fixing screws can be obtained from the machine or system manufacturer.

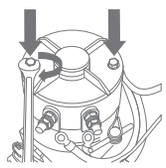

3.8 Connect the electrical connection cables to the electrical motor. Make sure that the cables are correctly laid and are not in contact with hot parts and abrasion points.

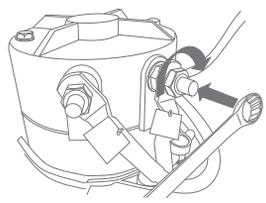

3.9 Reconnect the negative battery cable. Before starting the system, make sure that the battery is fully charged.

Finally check the functioning of the complete electrical system in accordance with the machine or system manufacturer.

	TY	V	kW	RPM	OP	RO	IP	F	NOTES
IM0001	DC	12	2,1	2.000	S2=1 min S3=5%ED	→	IP54	Hidroirma	IG/H/HD

E.M.S.,HYDROTECHNIC,BUCHER HYDRAULICS (HIDROIRMA)

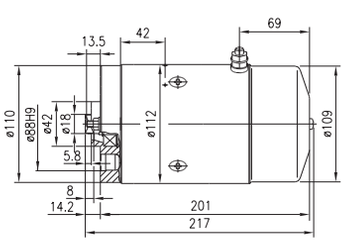

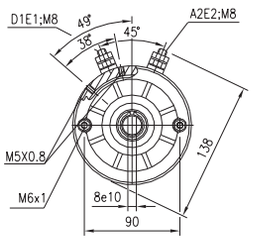

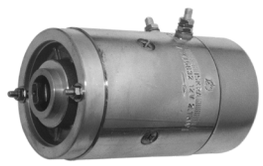

	TY	V	kW	RPM	OP	RO	IP	F	NOTES
IM0002	DC	24	2,1	2.200	S2=4 min S3=10%ED	→	IP54	Hidroirma	IG/H/HD

E.M.S.,HYDROTECHNIC,BUCHER HYDRAULICS (HIDROIRMA)

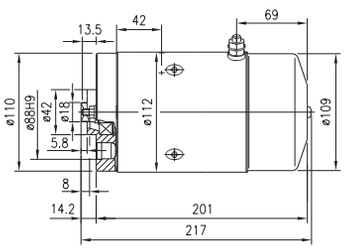

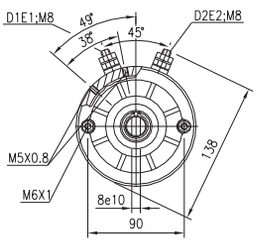

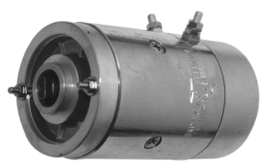

	TY	V	kW	RPM	OP	RO	IP	F	NOTES
IM0003	DC	12	1,5	2.300	S2=1 min S3=5%ED	→	IP54	Hidroirma	IG/H

BUCHER HYDRAULICS (HIDROIRMA)

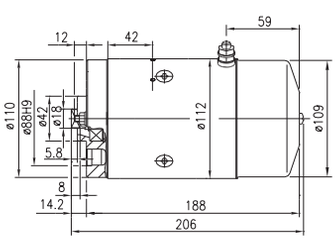

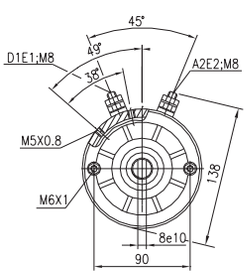

	TY	V	kW	RPM	OP	RO	IP	F	NOTES
IM0004	DC	24	2,0	2.200	S2=2 min S3=5%ED	→	IP54	Hidroirma	IG/H

BUCHER HYDRAULICS (HIDROIRMA)

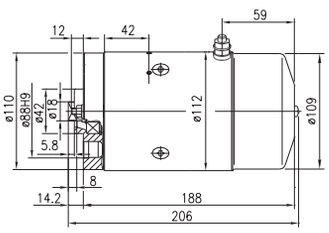

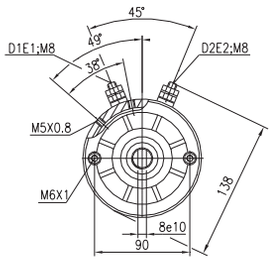

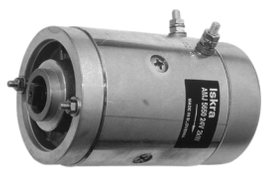

IM0005	DC	12	1,5	2.300	S2=1 min S3=5%ED	→	IP54	Customer design	IG/H

OMFB

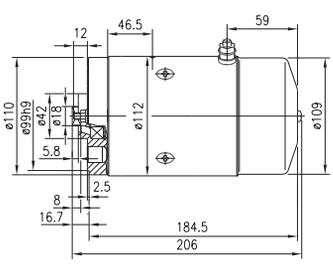

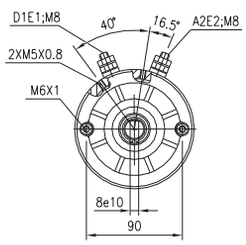

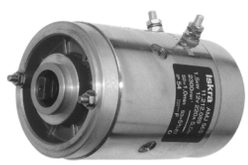

IM0006	DC	24	2,0	2.200	S2=2 min S3=5%ED	→	IP54	Customer design	IG/H

OMFB,CASAPPA

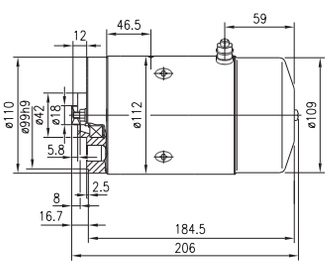

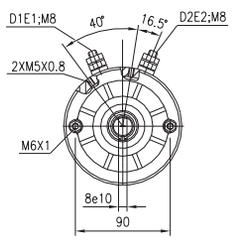

	TY	V	kW	RPM	OP	RO	IP	F	NOTES
IM0007	DC	24	1,9	4.300	S2=4 min S3=10%ED	←	IP54	Transport	IG/H/HD

SAVERY,HALDEX HYDRAULICS

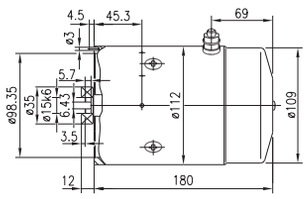

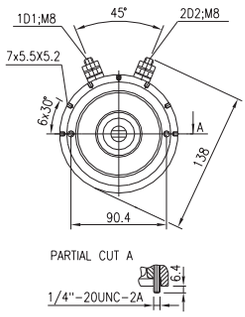

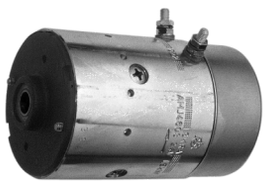

IM0008	DC	24	2,1	2.200	S2=4 min S3=10%ED	←	IP54	Transport	IG/H/HD

MTE,FLUITRONICS (BERENDSEN),HYDR-APP

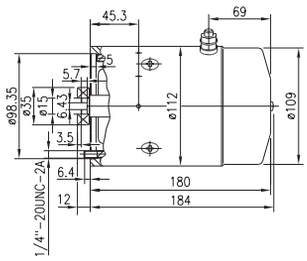

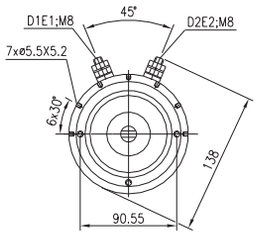

IM0009	DC	24	3,0	3.300	S2=4 min S3=15%ED	←	IP43	Transport	IG/H

HYDR-APP,ICEM

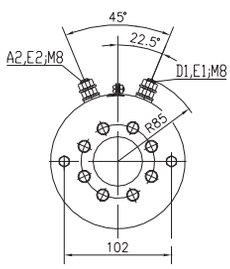

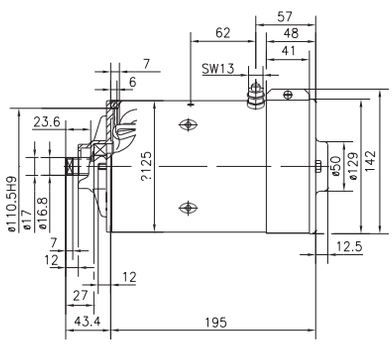

	TY	V	kW	RPM	OP	RO	IP	F	NOTES
IM0010	DC	24	2,0	2.200	S2=4,5 min S3=10%ED	→	IP23	Bosch 40 X 40	IG/H/VT

OIL SISTEM

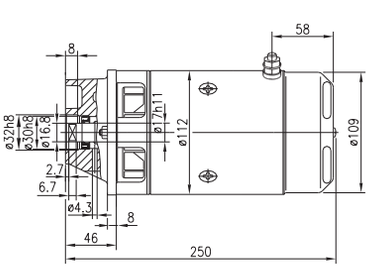

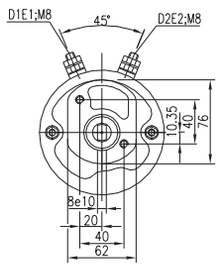

IM0011	DC	24	3,0	3.300	S2=4 min S3=15%ED	→	IP44	Hesselman	TP/IG/H

DAUTEL,ZEPRO,DHOLLANDIA,K.G. KLINGA,HESSELMAN

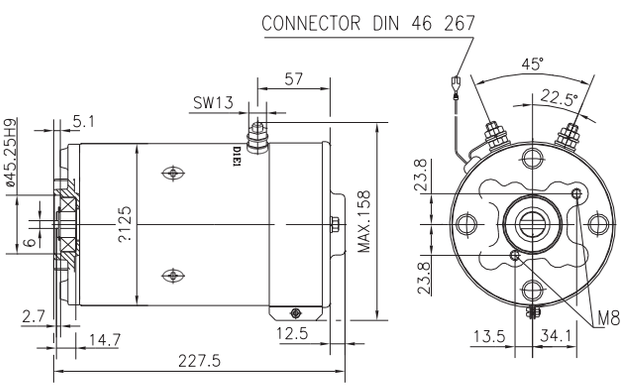

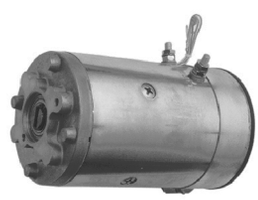

IM0012	DC	12	2,1	2.000	S2=1 min S3=5%ED	→	IP54	Transport	IG/H/HD

BUCHER HYDRAULICS (HIDROIRMA),FLUITRONICS (BERENDSEN)

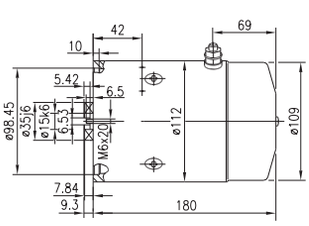

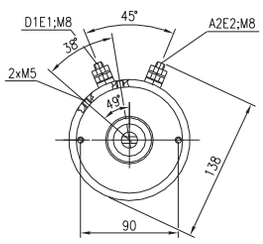

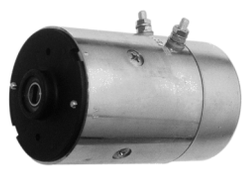

	TY	V	kW	RPM	OP	RO	IP	F	NOTES
IM0013	DC	24	2,0	2.200	S2=2 min S3=5%ED	→	IP54	Bosch 40 X 40	IG/H

CAMPISA

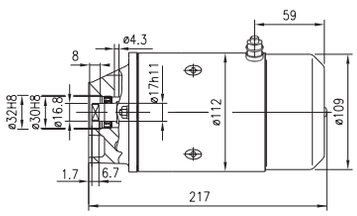

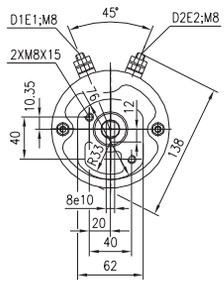

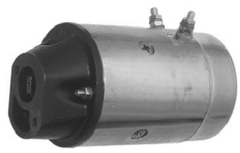

IM0014	DC	24	3,0	2.600	S2=4 min S3=15%ED	→	IP44	Bosch 60 X 60	IG/H

CAMPISA

IM0015	DC	12	1,5	2.500	S2=1 min S3=5%ED	→	IP54	Bosch 40 X 40	IG/H

CAMPISA

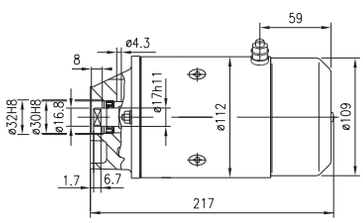

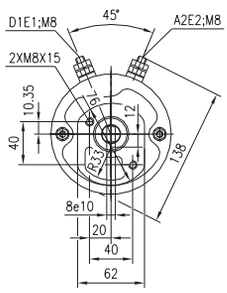

	TY	V	kW	RPM	OP	RO	IP	F	NOTES
IM0016	DC	24	3,0	3.300	S2=4 min S3=15%ED	→	IP43	Transport	IG/H

HYDRA,SAVERY,SPX FLUID POWER (SMITHS),FLUIDLINK HYDRAULICS LTD

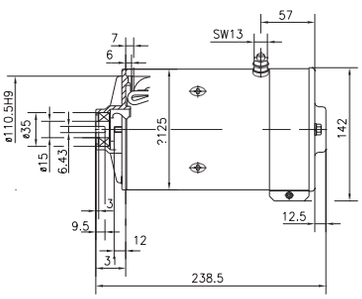

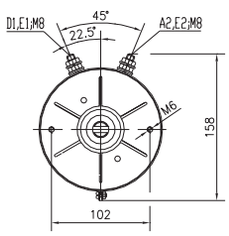

IM0017	DC	24	3,0	2.000	S2=14 min S3=28%ED	↔	IP23	Customer design	TP/IG/T

HAKO

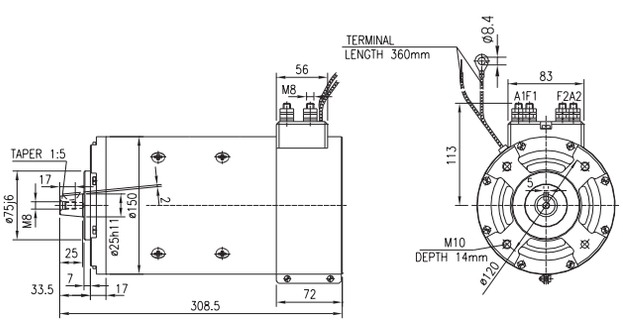

PICTURES NOT AVAILABLE

IM0018	DC	12	1,5	2.300	S2=1 min S3=5%ED	→	IP54	Hidroirma	TP/IG/H

BUCHER HYDRAULICS (HIDROIRMA)

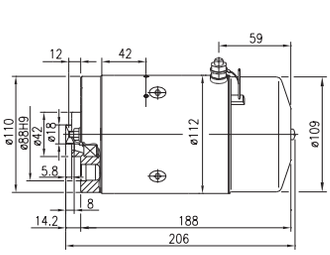

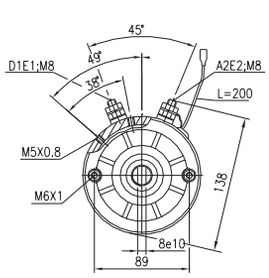

	TY	V	kW	RPM	OP	RO	IP	F	NOTES
IM0019	DC	24	2,0	2.200	S2=2 min S3=5%ED	→	IP54	Hidroirma	TP/IG/H

BUCHER HYDRAULICS (HIDROIRMA)

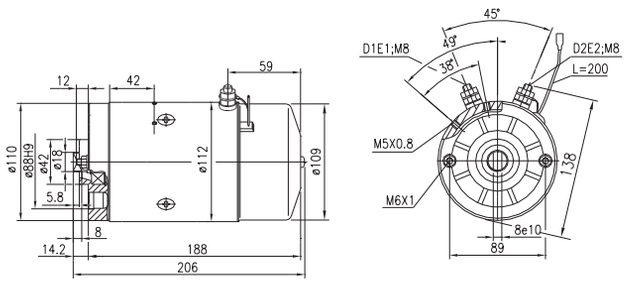

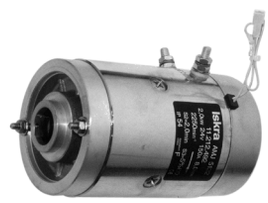

IM0020	DC	24	2,1	2.200	S2=4 min S3=10%ED	←	IP54	Hidroirma	IG/H/HD

MIC,OLEODINAMICA REGGIANA,HPI,OIL SISTEM

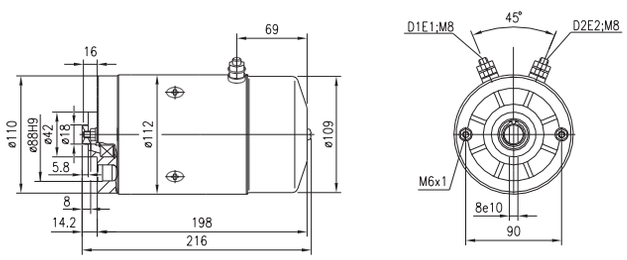

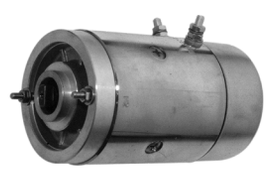

IM0021	DC	24	2,0	2.600	S2=1,2 min S3=4,5%ED	→	IP54	Transport	IG/H

BUCHER HYDRAULICS (HIDROIRMA),FLUITRONICS (BERENDSEN)

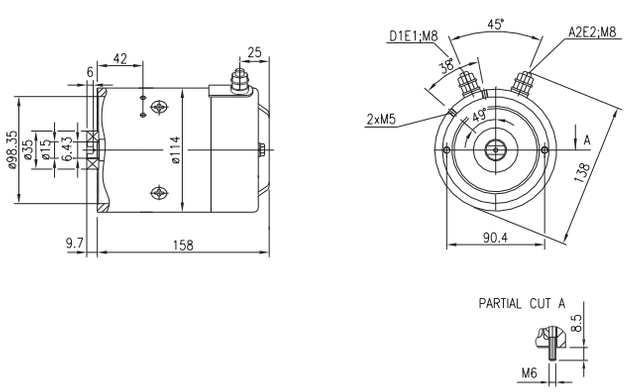

	TY	V	kW	RPM	OP	RO	IP	F	NOTES
IM0022	DC	48	2,0	2.500	S2=3 min S3=12%ED	→	IP54	Hidroirma	IG/H

SAVERY,BUCHER HYDRAULICS (HIDROIRMA),OIL SISTEM

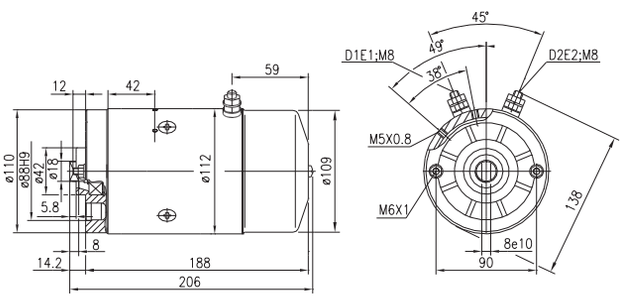

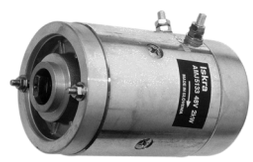

IM0023	DC	72	1,0	1.900	S1	→	IP20	Bosch 60 X 60	IG/H/VT

BOSCH,HYTOS

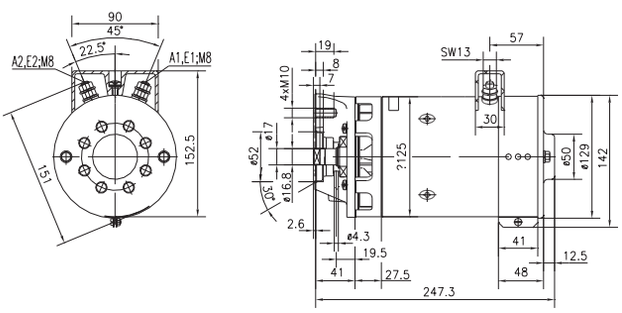

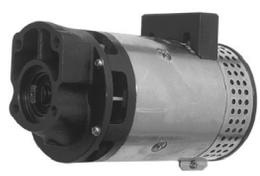

IM0024	DC	12	1,2	2.900	S2=1,3 min S3=4,5%ED	←	IP54	Transport	G/H

MTE

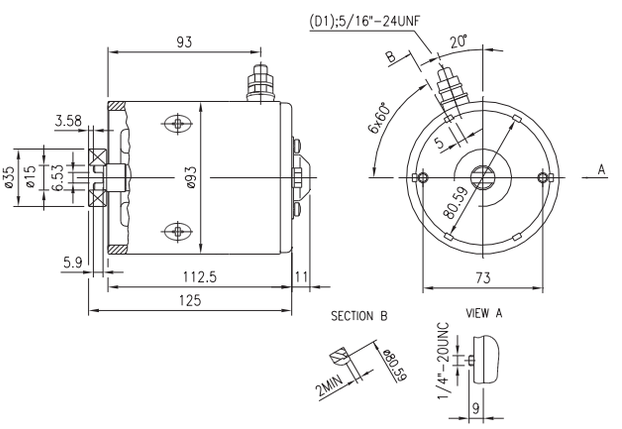

	TY	V	kW	RPM	OP	RO	IP	F	NOTES
IM0025	DC	24	1,2	3.000	S2=1 min S3=4%ED	←	IP54	Transport	IG/H

MTE

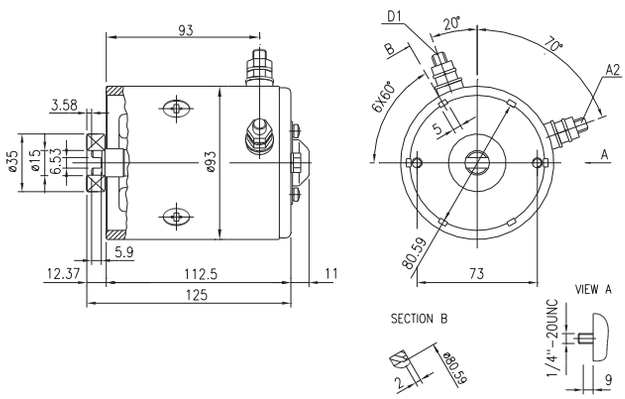

IM0026	DC	24	2,1	2.200	S2=4,5 min S3=10%ED	→	IP12	Bosch 40 X 40	IG/H/VT /HD

BOSCH

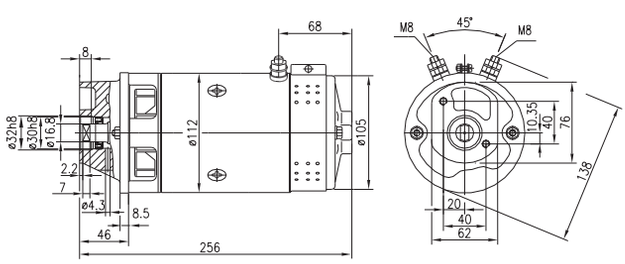

IM0027	DC	12	0,5	1.700	S1	↔	IP54	Customer design	IG/O

MIC,KORTE HEITMAN

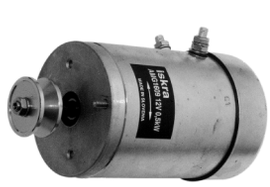

	TY	V	kW	RPM	OP	RO	IP	F	NOTES
IM0028	DC	12	1,6	2.600	S2=2 min S3=10%ED	→	IP54	Customer design	IG/H

DAUTEL,MBB PALFINGER,OIL SISTEM

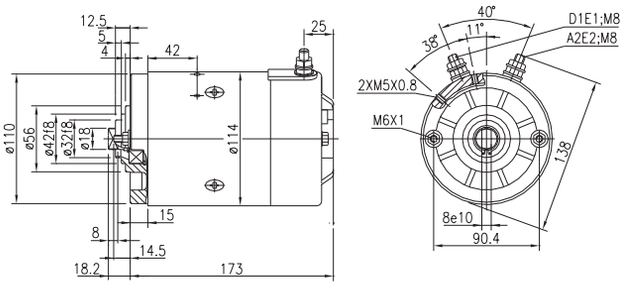

IM0029	DC	24	2,2	2.600	S2=2 min S3=5%ED	→	IP54	Customer design	IG/H

OIL SISTEM

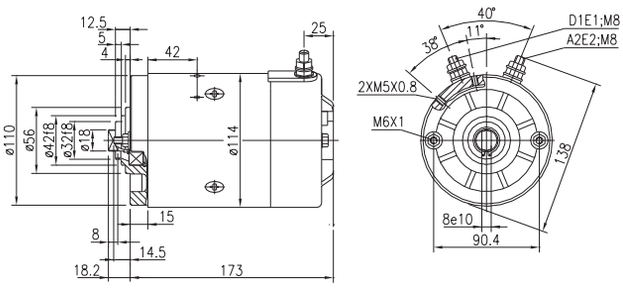

IM0030	DC	24	2,2	2.600	S2=1,2 min S3=4,5%ED	→	IP54	Transport	IG/H

HYDROTECHNIC,HYDRIS,SPX FLUID POWER (SMITHS),FLUIDLINK HYDRAULICS LTD

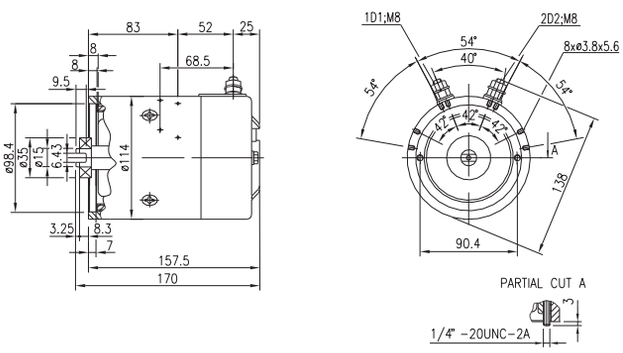

	TY	V	kW	RPM	OP	RO	IP	F	NOTES
IM0031	DC	12	1,6	3.200	S2=3 min S3=7,5%ED	→	IP54	Transport	G/H

SPX FLUID POWER (SMITHS)

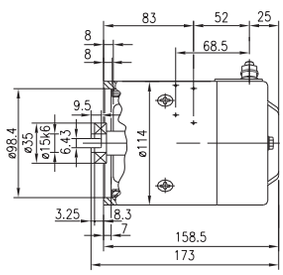

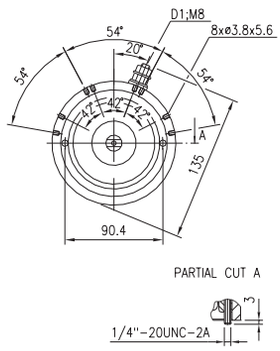

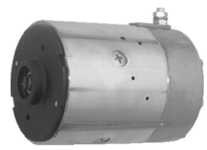

IM0032	DC	12	1,6	3.200	S2=3 min S3=7,5%ED	→	IP54	Transport	IG/H

SPX FLUID POWER (SMITHS),FLUIDLINK HYDRAULICS LTD

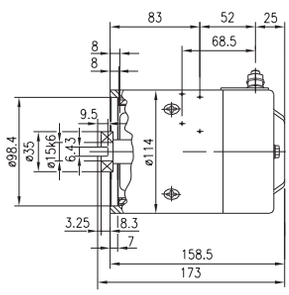

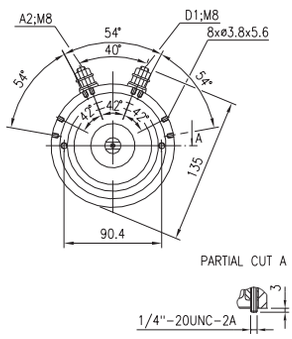

IM0033	DC	12	1,6	2.600	S2=3 min S3=7,5%ED	→	IP54	Transport	IG/H

SPX FLUID POWER (SMITHS),FLUIDLINK HYDRAULICS LTD

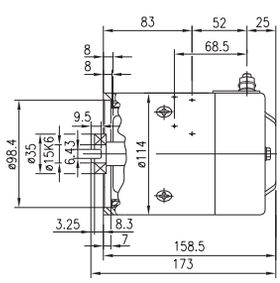

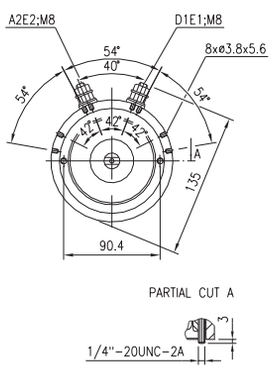

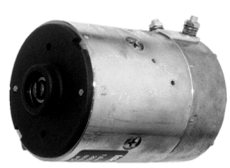

	TY	V	kW	RPM	OP	RO	IP	F	NOTES
IM0034	DC	24	2,2	2.600	S2=2 min S3=5%ED	→	IP54	Transport	IG/H

K.G. KLINGA,SPX FLUID POWER (SMITHS),FLUIDLINK HYDRAULICS LTD

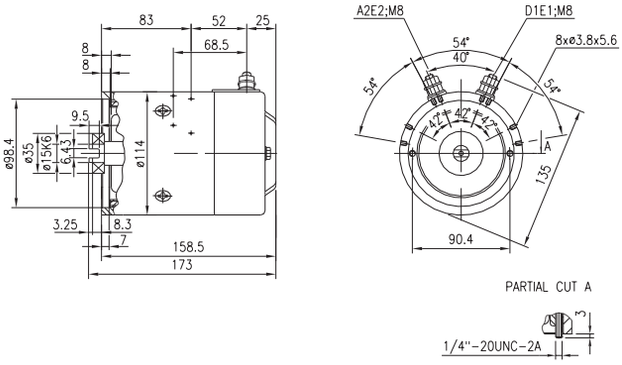

IM0035	DC	24	2,1	2.200	S2=4,5 min S3=10%ED	→	IP12	Bosch 40 X 40	IG/H/VT /HD

BOSCH

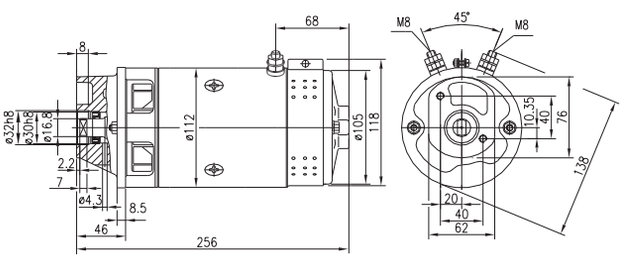

IM0036	DC	12	1,6	2.600	S2=3 min S3=7,5%ED	→	IP54	Transport	IG/H

BUCHER HYDRAULICS (HIDROIRMA),OIL SISTEM

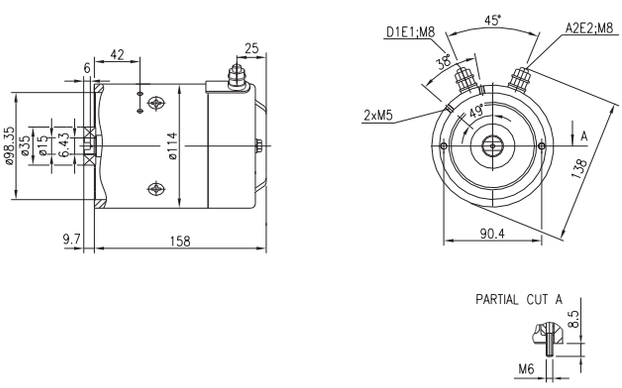

	TY	V	kW	RPM	OP	RO	IP	F	NOTES
IM0037	DC	24	3,0	3.300	S2=6 min S3=20%ED	→	IP12	Customer design	IG/H/VT

FIAT,BUCHER HYDRAULICS (HIDROIRMA)

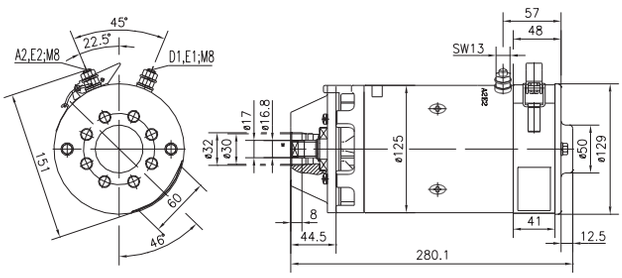

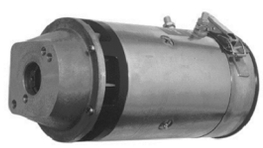

IM0038	DC	24	2,2	2.600	S2=1,2 min S3=4,5%ED	→	IP54	Customer design	TP/IG/H

ANTEO,SMOES,HYDROVEN

IM0039	DC	12	1,6	2.600	S2=3 min S3=7,5%ED	→	IP54	Customer design	TP/IG/H

ANTEO,SMOES,HYDROVEN

	TY	V	kW	RPM	OP	RO	IP	F	NOTES
IM0040	DC	24	2,0	2.200	S2=30 min S3=45%ED	⟷	IP21	Shaft-both end	IG/T

ATLET

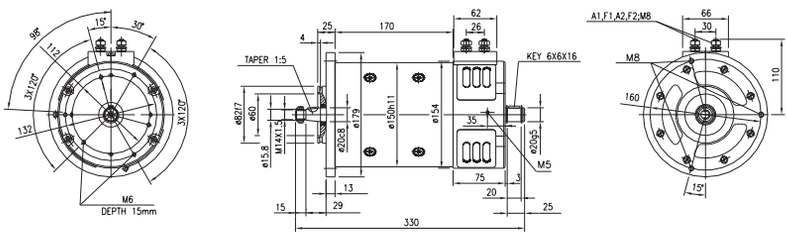

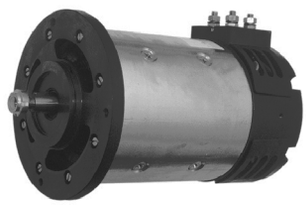

IM0041	DC	12	2,1	2.000	S2=1 min S3=5%ED	⟵	IP54	Hidroirma	IG/H/HD

MIC,OLEODINAMICA REGGIANA,HPI

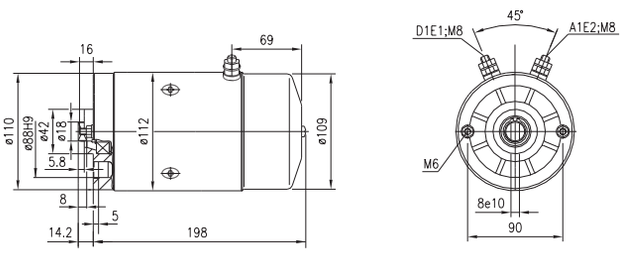

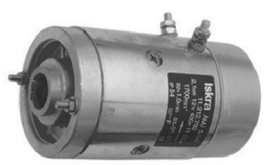

IM0042	DC	12	1,5	2.800		⟷	IP44	Transport	G/O

WINCH INDUSTRIES

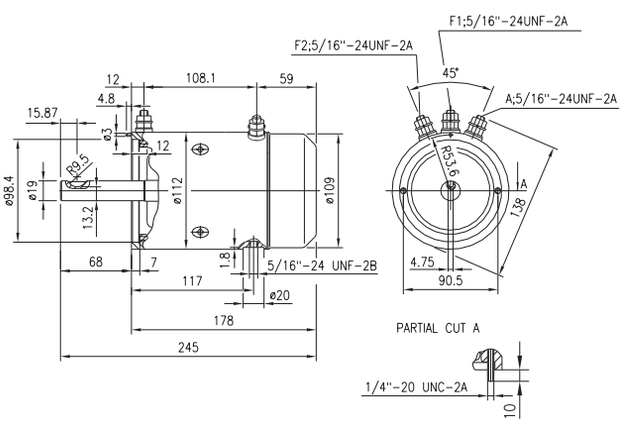

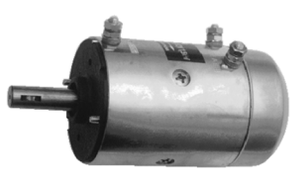

	TY	V	kW	RPM	OP	RO	IP	F	NOTES
IM0043	DC	24	2,0	4.000		⟷	IP44	Transport	G/O

WINCH INDUSTRIES

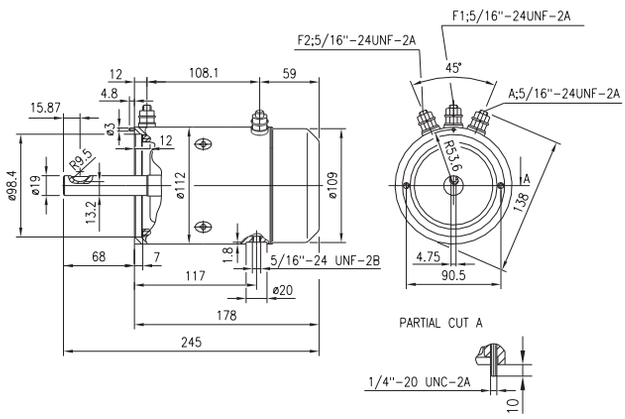

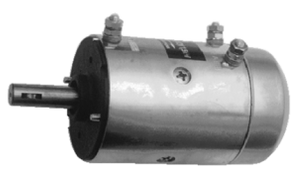

IM0044	DC	24	3,0	2.600	S2=6 min S3=16%ED	→	IP20	Bosch 60 X 60	IG/H/VT

BOSCH,HYTOS,MARIOTTI

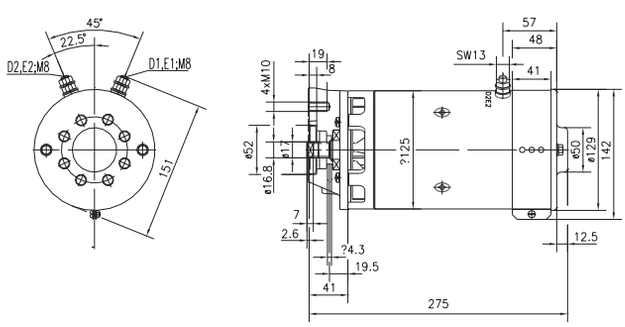

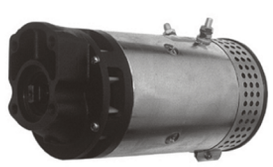

IM0045	DC	24	3,0	2.600	S2=4 min S3=8%ED	←	IP44	Customer design	IG/H

HALDEX HYDRAULICS,HPI

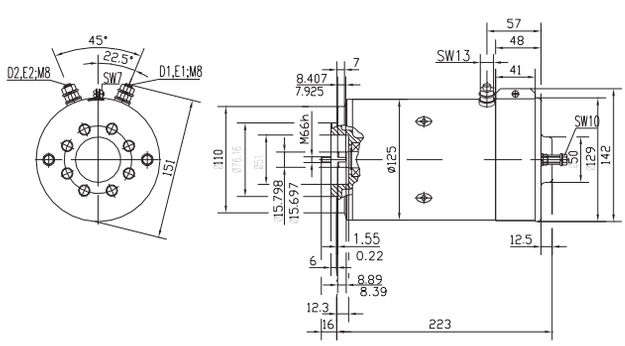

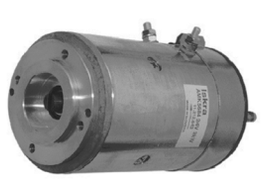

	TY	V	kW	RPM	OP	RO	IP	F	NOTES
IM0046	DC	24	3,0	2.600	S2=6 min S3=16%ED	→	IP20	Transport	IG/H/VT

OIL SISTEM

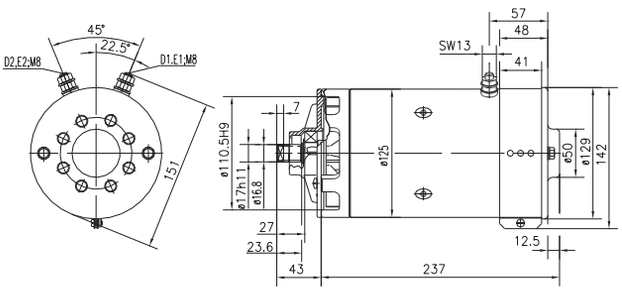

PICTURES NOT AVAILABLE

IM0047	DC	24	2,0	2.200	S2=4,5 min S3=10%ED	→	IP23	Customer design	IG/H/VT

HYDROVEN,OIL SISTEM

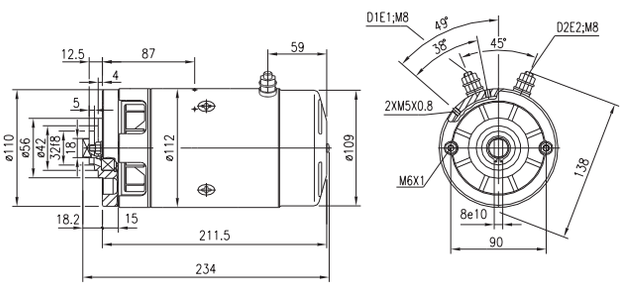

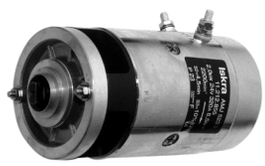

IM0048	DC	24	2,2	1.500	S2=2 min S3=8%ED	←	IP54	Transport	IG/H

RELATED FLUID POWER

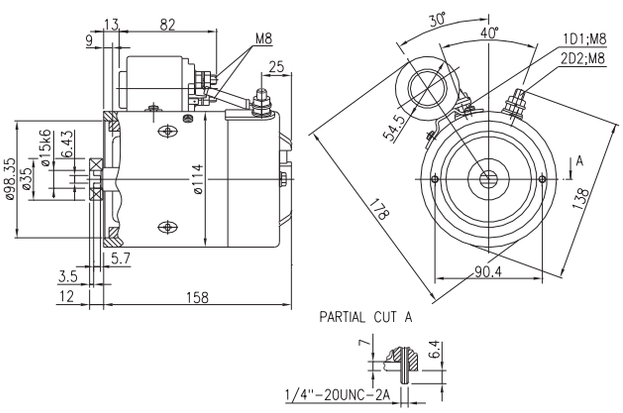

	TY	V	kW	RPM	OP	RO	IP	F	NOTES
IM0049	DC	24	2,1	1.900	S2=60 min	↔	IP21	Shaft-both end	IG/T/VT

ATLET

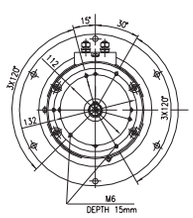

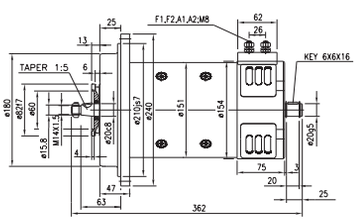

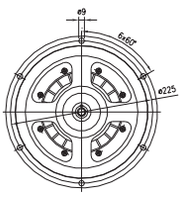

IM0050	DC	12	1,6	2.600	S2=2 min S3=10%ED	→	IP54	Transport	IG/H

WEBER,BUCHER HYDRAULICS (HIDROIRMA),PEDRO ROQET,SPX FLUID POWER (FENNER)

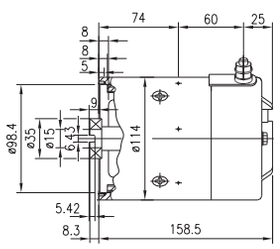

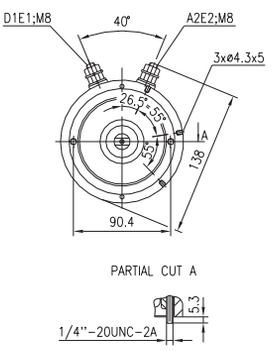

IM0051	DC	24	2,2	2.800	S2=2 min S3=5%ED	→	IP54	Transport	IG/H

WEBER,BUCHER HYDRAULICS (HIDROIRMA),PEDRO ROQET,SPX FLUID POWER (FENNER)

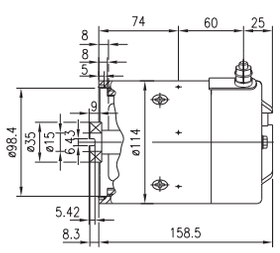

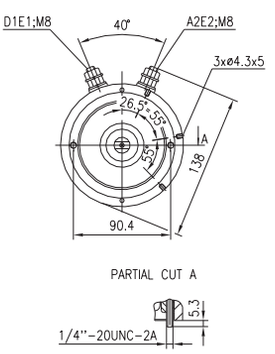

	TY	V	kW	RPM	OP	RO	IP	F	NOTES
IM0052	DC	24	2,0	2.200	S2=30 min S3=45%ED	↔	IP21	Shaft-both end	IG/T

ATLET,ICEM

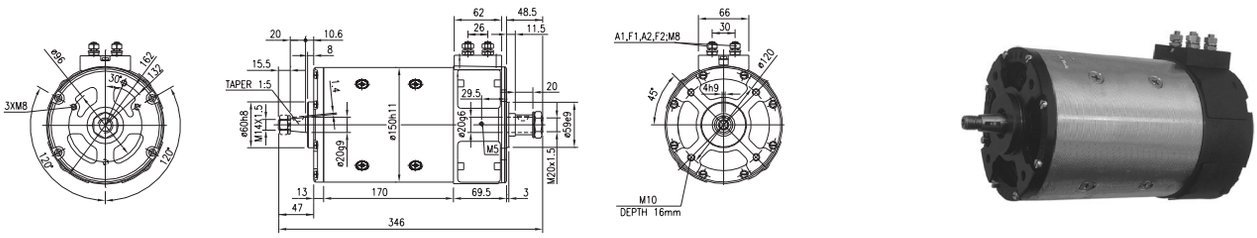

IM0053	DC	24	3,0	2.000	S2=14 min S3=28%ED	↔	IP23	Customer design	TP/IG/T

HMB

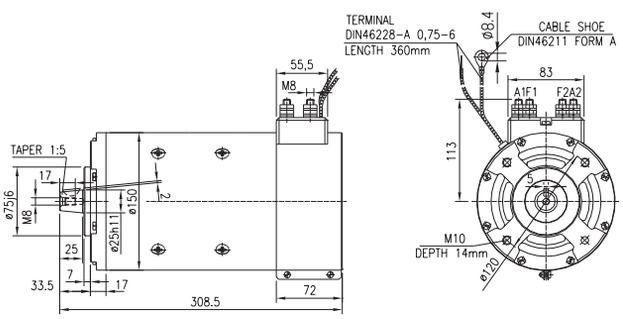

PICTURES NOT AVAILABLE

IM0054	DC	12	1,6	2.600	S2=3 min S3=7,5%ED	→	IP54	Hesselman	TP/IG/H

DAUTEL,ZEPRO,DHOLLANDIA,HESSELMAN,OIL SISTEM

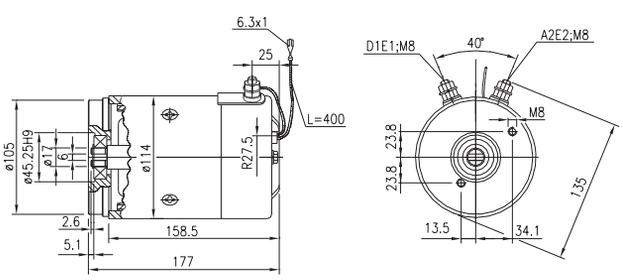

	TY	V	kW	RPM	OP	RO	IP	F	NOTES
IM0055	DC	24	2,2	2.600	S2=1,2 min S3=4,5%ED	→	IP54	Hesselman	TP/IG/H

DAUTEL,ZEPRO,DHOLLANDIA,HESSELMAN,OIL SISTEM

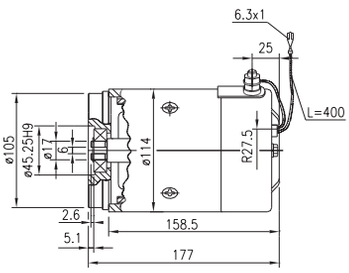

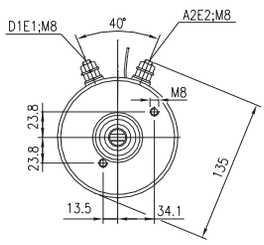

IM0056	DC	24	1,5	2.400	S1	↔	IP21	Shaft-both end	IG/T

ROCLA

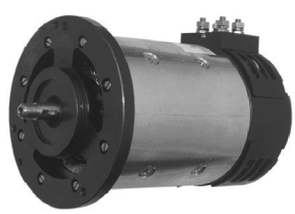

IM0057	DC	24	2,2	2.600	S2=1,2 min S3=4,5%ED	→	IP54	Customer design	TP/IG/H

DAUTEL,MBB PALFINGER,OIL SISTEM

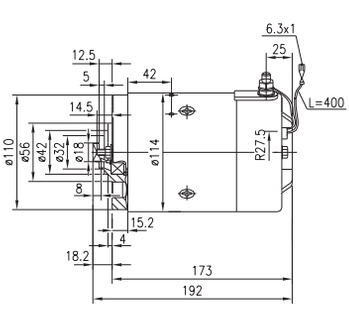

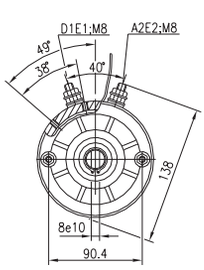

	TY	V	kW	RPM	OP	RO	IP	F	NOTES
IM0058	DC	12	0,5	2.500	S2=5 min S3=17%ED	⟷	IP65	Standard	IG/H

OIL SISTEM

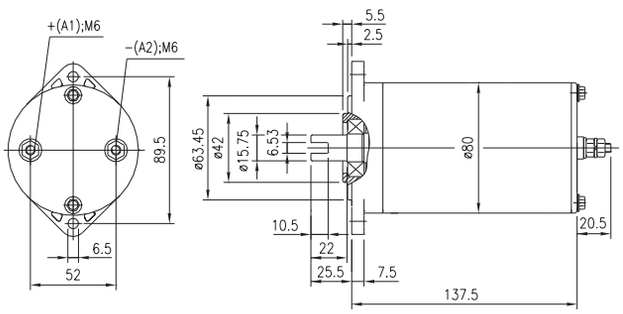

IM0063	DC	24	0,7	3.200	S2=35 min	⟷	IP54	Shaft-both end	IG/T

PIMESPO / IVECO

IM0064	DC	24	2,1	2.050	S2=60 min	⟷	IP12	Shaft-both end	IG/T/VT

WALSTED

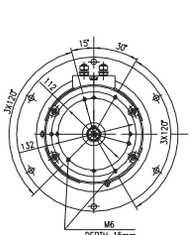

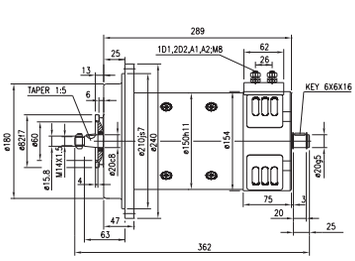

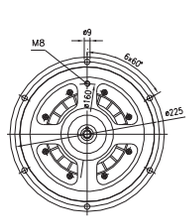

	TY	V	kW	RPM	OP	RO	IP	F	NOTES
IM0065	DC	24	5,5	2.000	S2=5 min S3=10%ED	→	IP24	Bosch 60 X 60	IG/H/VT

BOSCH

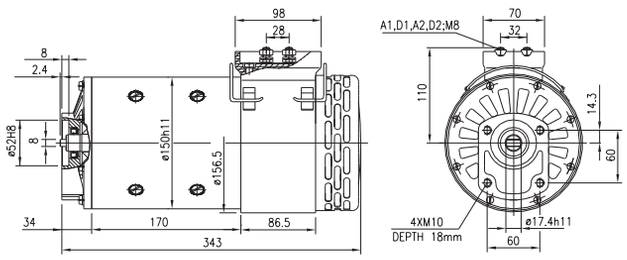

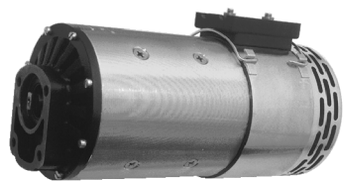

	TY	V	kW	RPM	OP	RO	IP	F	NOTES
IM0068	DC	24	2,5	1.500	S2=7 min S3=10%ED	→	IP24	Bosch 60 X 60	IG/H

BOSCH,SAMAG

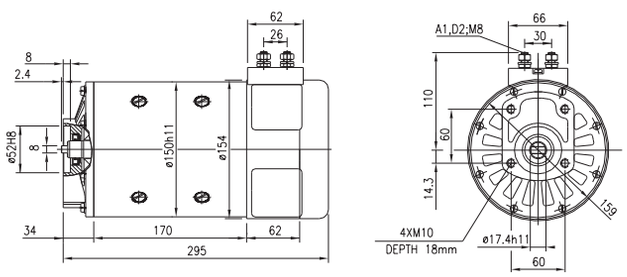

PICTURES NOT AVAILABLE

	TY	V	kW	RPM	OP	RO	IP	F	NOTES
IM0069	DC	24	3,0	1.600	S2=7 min S3=10%ED	→	IP24	Bosch 60 X 60	IG/H

BOSCH,FIAT,PIMESPO / IVECO

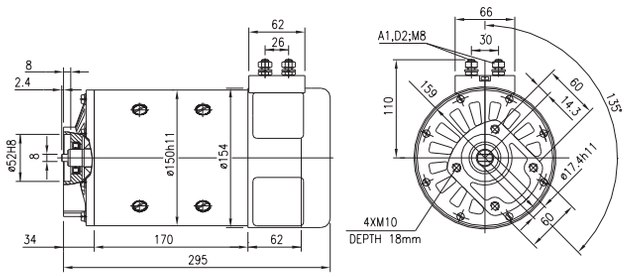

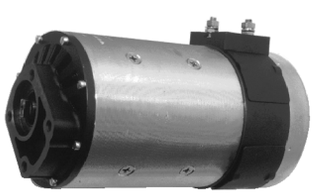

	TY	V	kW	RPM	OP	RO	IP	F	NOTES
IM0070	DC	24	1,1	1.500	S2=60 min	⟷	IP12	Shaft-both end	IG/T

HAKO,KOTTGEN,LOGO,PIMESPO / IVECO

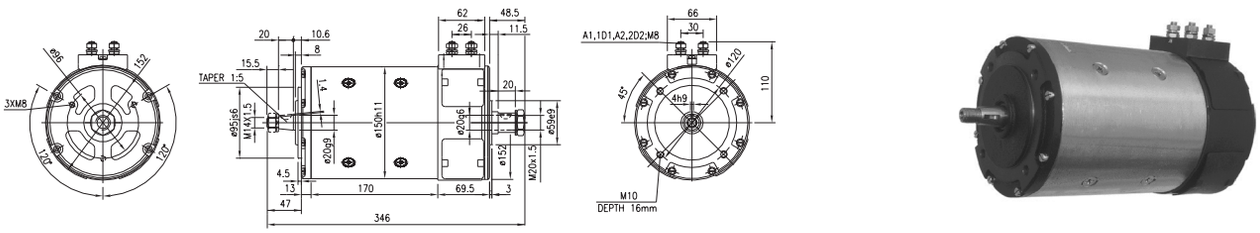

IM0072	DC	24	2,5	1.500	S2=15 min S3=20%ED	→	IP24	Bosch 60 X 60	IG/H

BOSCH

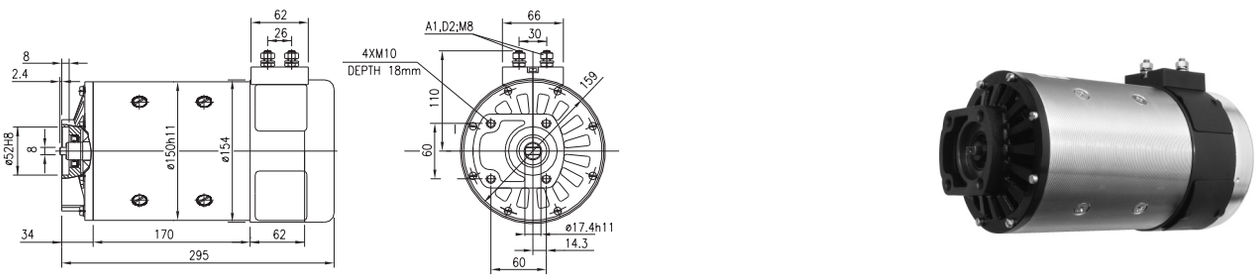

IM0073	DC	24	2,0	1.800	S2=20 min S3=22%ED	⟷	IP12	Shaft-both end	IG/T

PIMESPO / IVECO

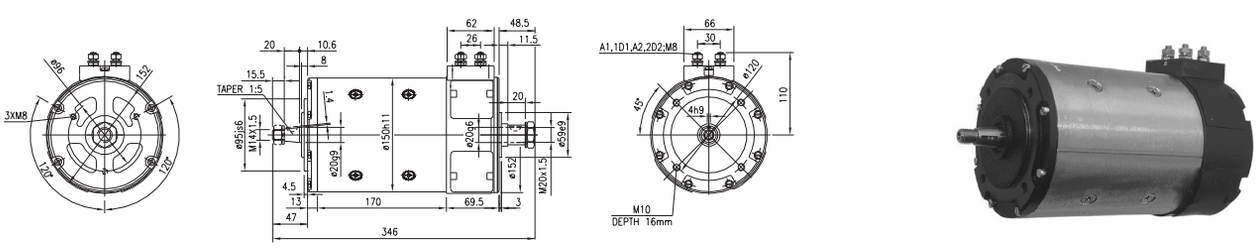

	TY	V	kW	RPM	OP	RO	IP	F	NOTES
IM0074	DC	48	0,3	3.100	S1	←	IP23	Bosch 60 X 60	IG/H

FIAT

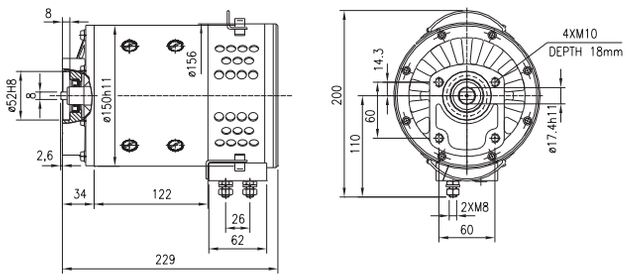

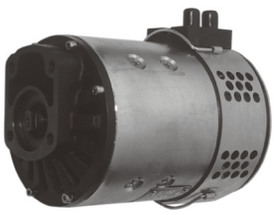

IM0075	DC	72	0,2	2.400	S1	←	IP23	Bosch 60 X 60	IG/H

FIAT

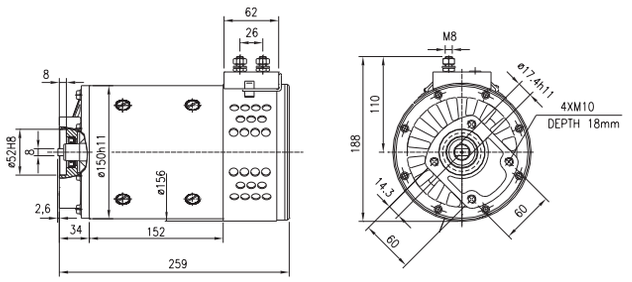

IM0076	DC	24	4,1	1.200	S2=7 min S3=10%ED	→	IP24	Bosch 60 X 60	IG/H/VT

BOSCH,FLUITRONICS (BERENDSEN)

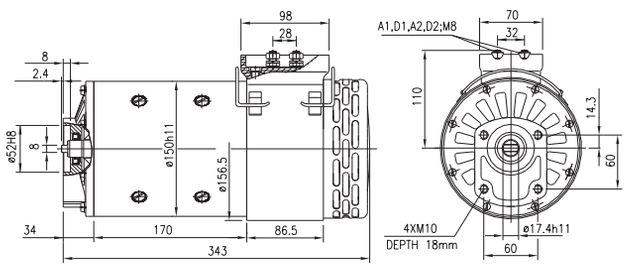

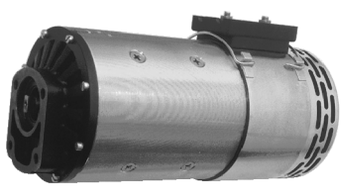

	TY	V	kW	RPM	OP	RO	IP	F	NOTES
IM0077	DC	24	3,0	1.600	S1	→	IP24	Bosch 60 X 60	IG/H/VT

BOSCH,RELATED FLUID POWER,SAMAG,FLUITRONICS (BERENDSEN),PIMESPO / IVECO

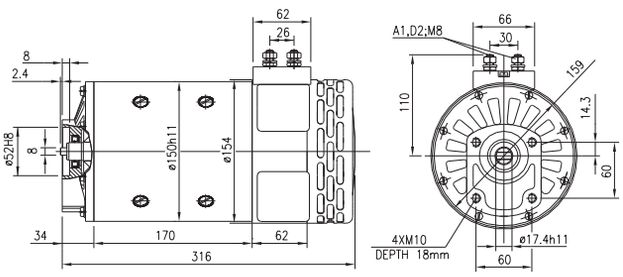

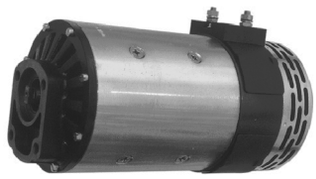

IM0078	DC	48	3,7	1.200	S2=12 min S3=20%ED	→	IP24	Bosch 60 X 60	IG/H/VT

BOSCH,TEREX

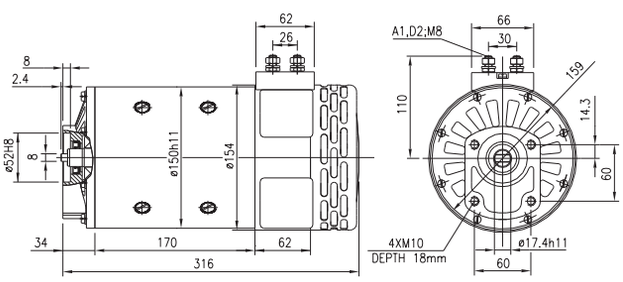

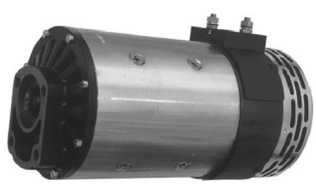

IM0079	DC	80	3,0	1.800	S1	→	IP24	Bosch 60 X 60	IG/H/VT

BOSCH

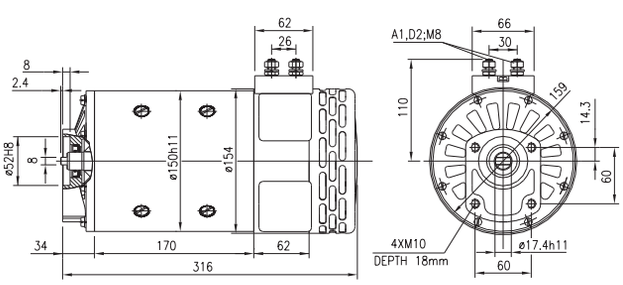

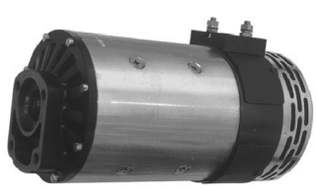

	TY	V	kW	RPM	OP	RO	IP	F	NOTES
IM0080	DC	80	3,0	1.800	S1	→	IP24	Customer design	IG/H/VT

BOSCH

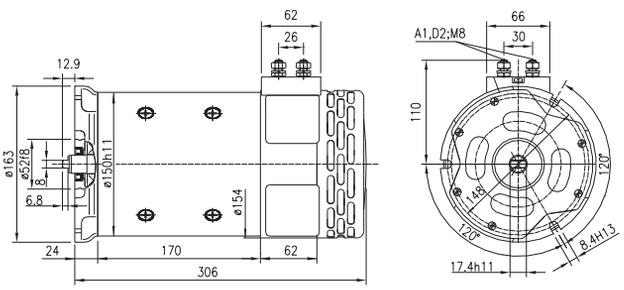

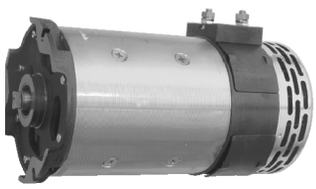

IM0081	DC	24	1,1	1.500	S2=60 min	↔	IP12	Shaft-both end	TP/IG/T

FIAT,PIMESPO / IVECO

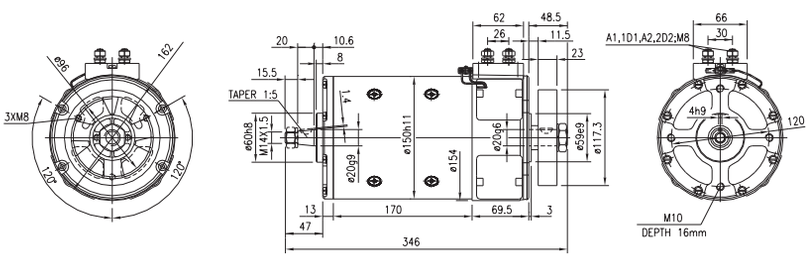

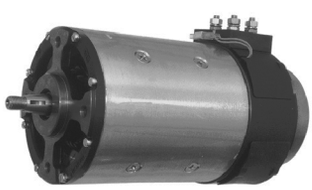

IM0082	DC	24	1,0	1.300	S2=60 min	↔	IP12	Shaft-both end	IG/T

ATLET,ICEM

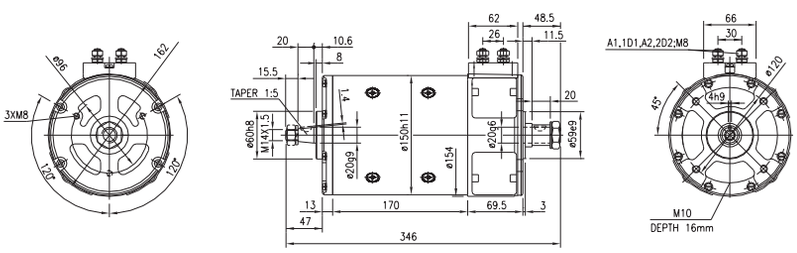

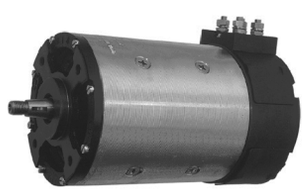

	TY	V	kW	RPM	OP	RO	IP	F	NOTES
IM0083	DC	24	2,0	1.800	S2=27 min S3=35%ED	⟷	IP12	Shaft-both end	IG/T

ATLET,KAESSBOHRER,SPYKSTAAL,ICEM

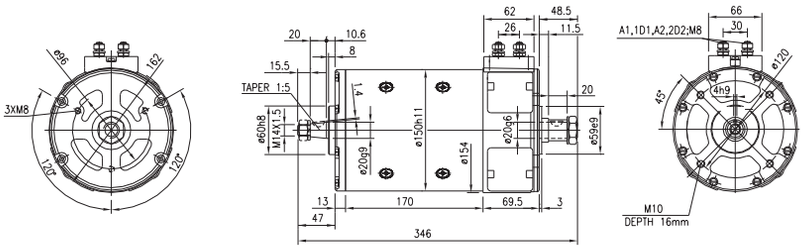

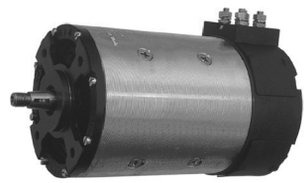

IM0084	DC	24	3,0	1.600	S1	→	IP24	Bosch 60 X 60	IG/H/VT

BOSCH,STILL WAGNER

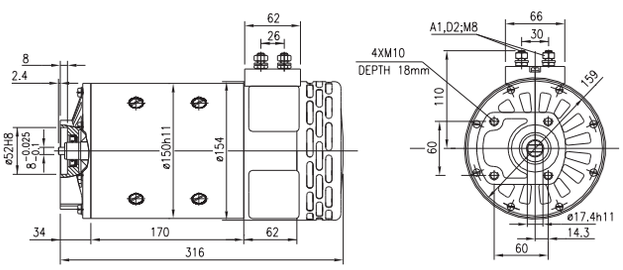

PICTURES NOT AVAILABLE

IM0085	DC	48	4,3	2.900	S2=25 min	⟷	IP23	Customer design	IG/T/VT

FIAT

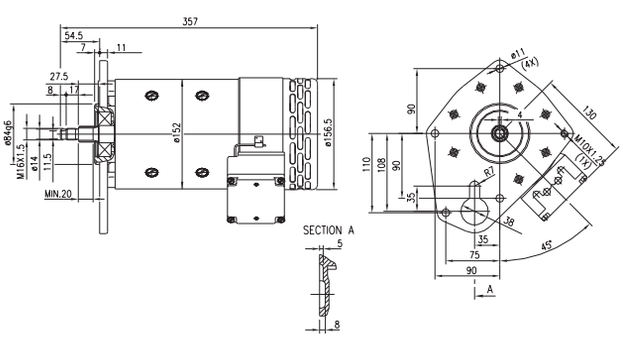

	TY	V	kW	RPM	OP	RO	IP	F	NOTES
IM0087	DC	24	1,1	1.500	S2=60 min	⟷	IP23	Shaft-both end	IG/T

WALSTED,ZF-GOTHA

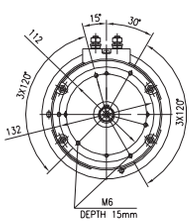

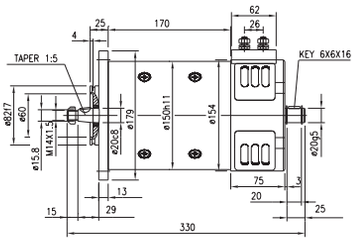

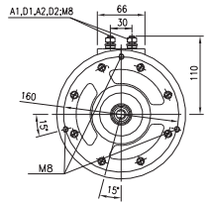

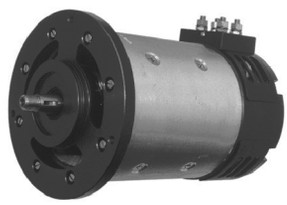

IM0088	DC	24	2,1	2.050	S2=60 min	⟷	IP12	Shaft-both end	IG/T/VT

WALSTED,ZF-GOTHA,PIMESPO / IVECO

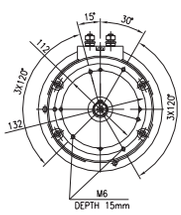

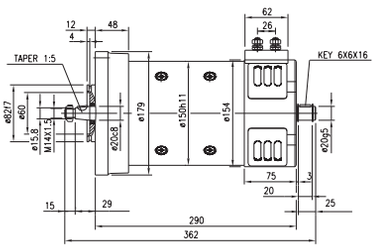

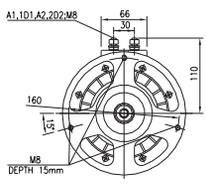

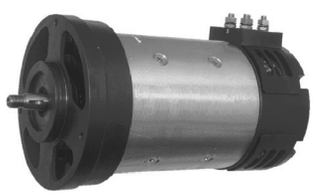

IM0090	DC	24	1,5	2.500	S2=60 min	⟷	IP23	Shaft-both end	IG/T

FENWICK,ZF-GOTHA,FENDT

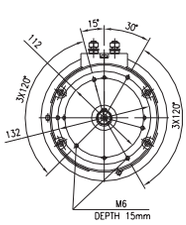

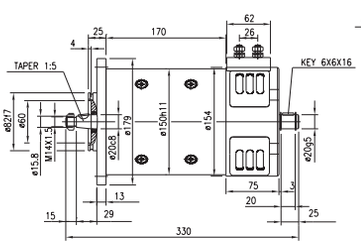

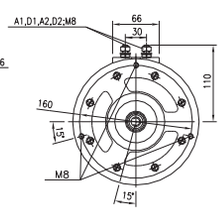

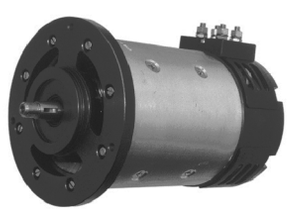

	TY	V	kW	RPM	OP	RO	IP	F	NOTES
IM0091	DC	24	2,6	2.200	S2=60 min	↔	IP12	Shaft-both end	IG/T/VT

ATLET LAFIS,ZF-GOTHA

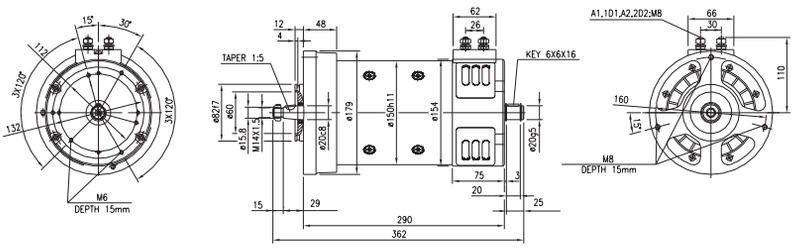

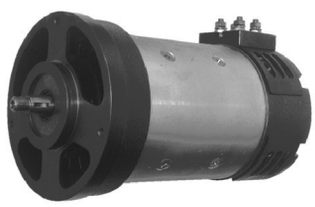

IM0092	DC	24	2,0	1.800	S2=27 min S3=35%ED	↔	IP12	Shaft-both end	IG/T

STILL WAGNER

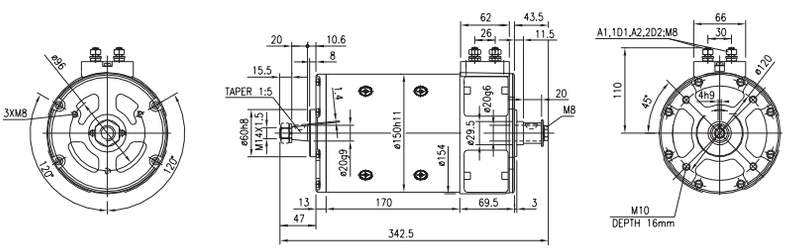

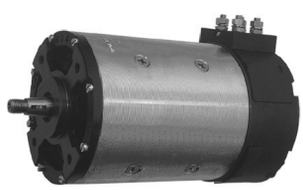

IM0093	DC	24	1,6	2.750	S2=60 min	↔	IP23	Shaft-both end	IG/T

FENWICK,LANSING

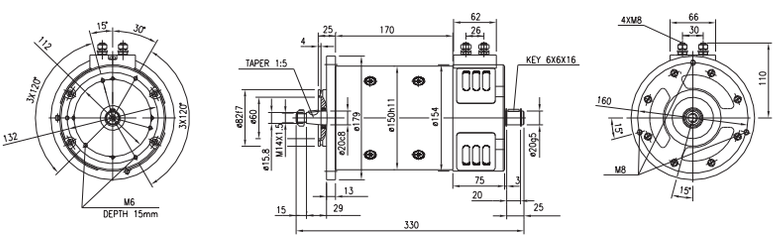

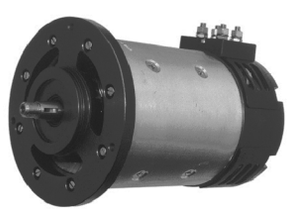

	TY	V	kW	RPM	OP	RO	IP	F	NOTES
IM0094	DC	24	1,0	1.300	S2=60 min	⟷	IP23	Shaft-both end	IG/T

STILL SAXBY,STILL WAGNER

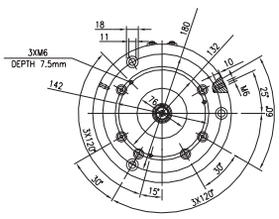

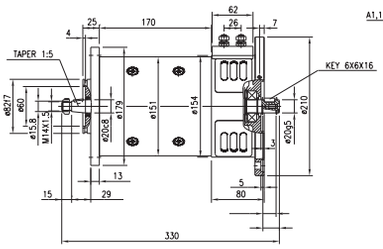

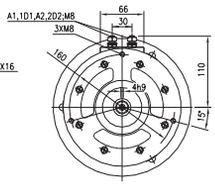

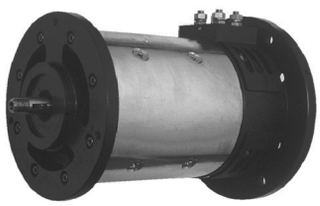

IM0095	DC	24	2,0	1.800	S2=12 min S3=27%ED	⟷	IP23	Shaft-both end	IG/T

STILL SAXBY,STILL WAGNER

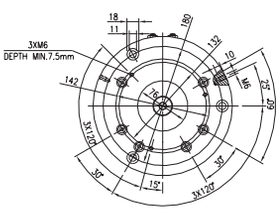

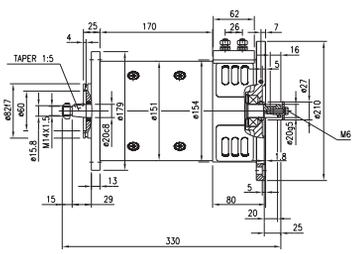

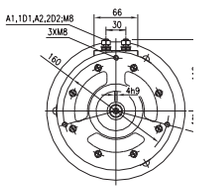

IM0096	DC	24	1,1	1.500	S2=60 min	⟷	IP23	Shaft-both end	IG/T

PIMESPO / IVECO

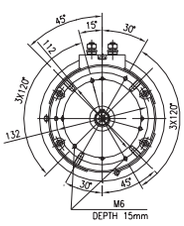

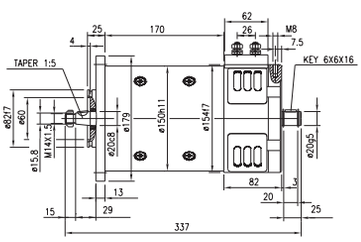

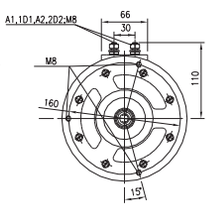

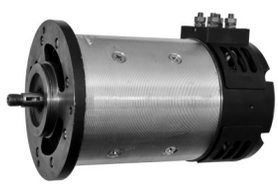

	TY	V	kW	RPM	OP	RO	IP	F	NOTES
IM0097	DC	24	1,1	1.500	S2=60 min	↔	IP23	Shaft-both end	IG/T

ATLET

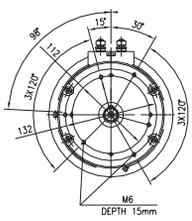

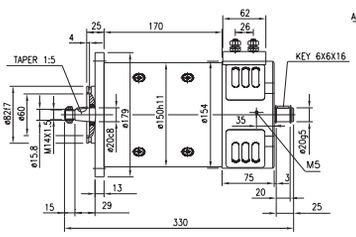

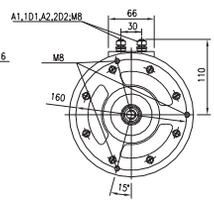

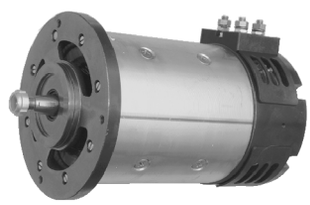

IM0099	DC	48	3,7	1.600	S2=12 min S3=20%ED	→	IP24	Bosch 60 X 60	IG/H/VT

BOSCH

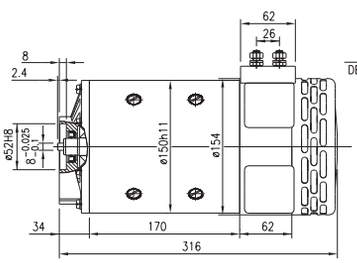

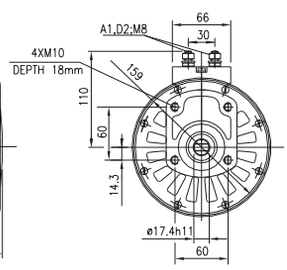

PICTURES NOT AVAILABLE

IM0100	DC	24	1,5	2.500	S2=60 min	↔	IP23	Shaft-both end	IG/T

VESTERGAARD

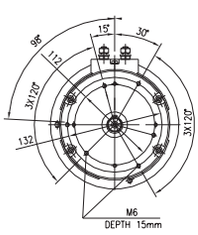

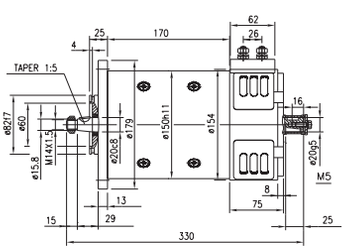

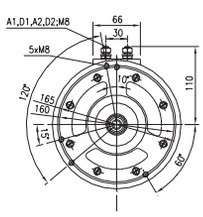

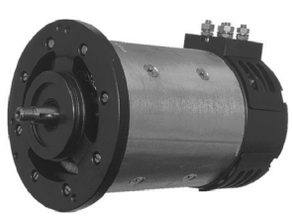

	TY	V	kW	RPM	OP	RO	IP	F	NOTES
IM0101	DC	24	1,6	2.750	S2=60 min	⟷	IP23	Shaft-both end	IG/T

FENWICK,FENDT

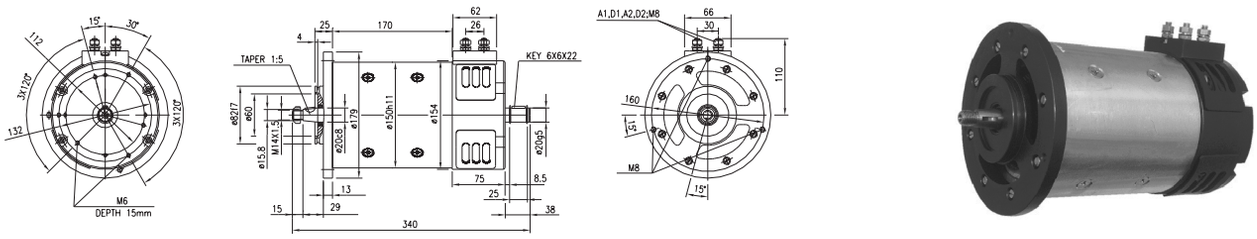

IM0103	DC	24	1,6	2.700	S2=60 min	⟷	IP23	Shaft-both end	IG/T

ATLET

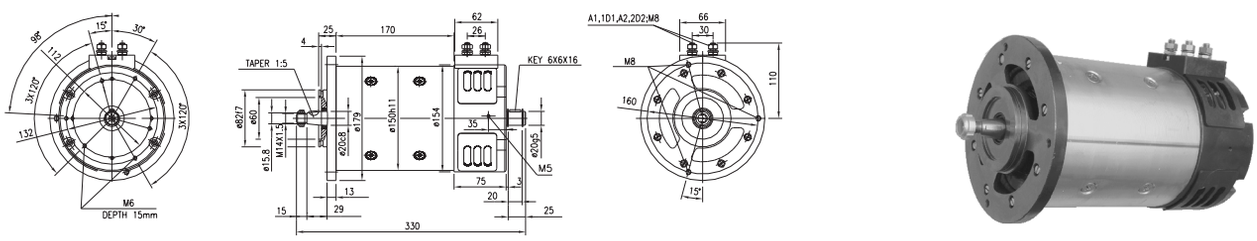

IM0104	DC	24	1,0	1.300	S2=60 min	⟷	IP23	Shaft-both end	IG/T

STILL SAXBY,STILL WAGNER

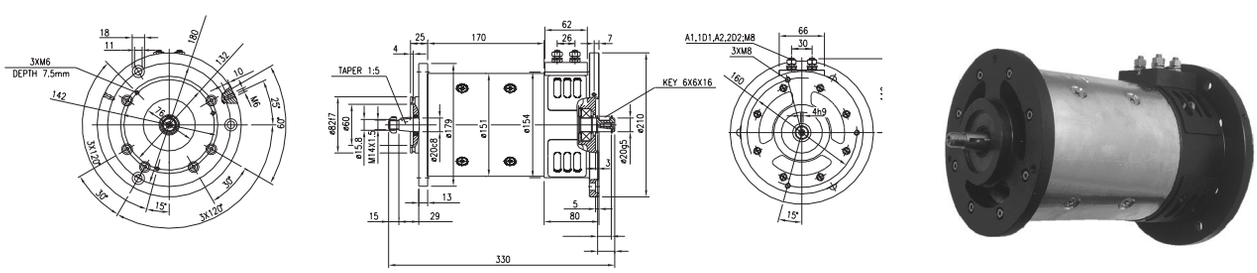

	TY	V	kW	RPM	OP	RO	IP	F	NOTES
IM0107	DC	48	4,0	2.200	S2=60 min	←	IP24	Customer design	IG/H/VT

CLARK

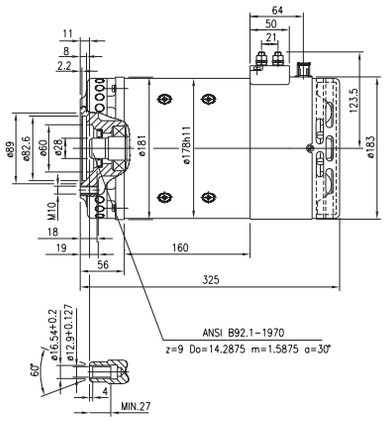

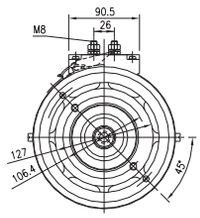

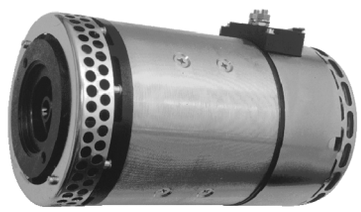

IM0108	DC	72	5,0	2.200	S2=50 min S3=40%ED	→	IP14	Bosch 60 X 60	IG/H/VT

BOSCH

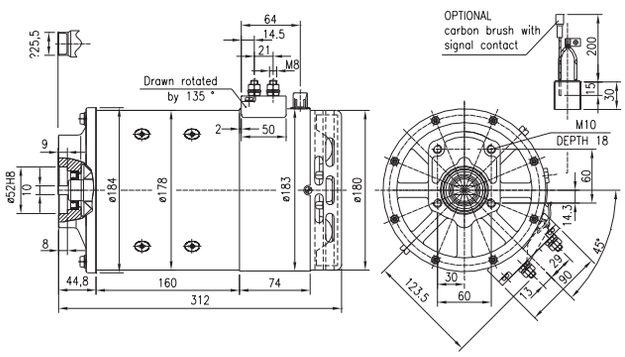

IM0111	DC	36	4,1	2.200	S2=45 min S3=60%ED	→	IP24	Bosch 60 X 60	IG/H/VT

MARIOTTI

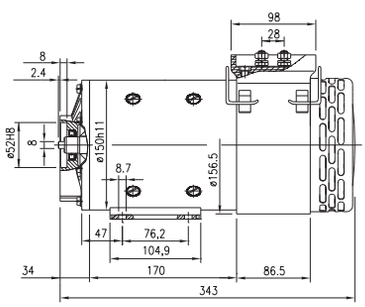

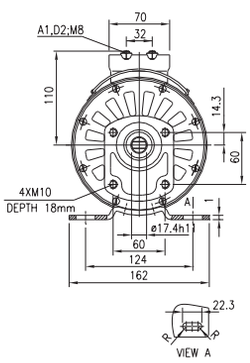

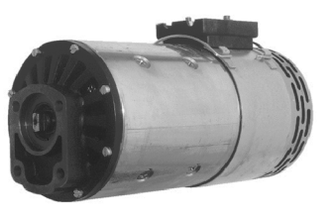

	TY	V	kW	RPM	OP	RO	IP	F	NOTES
IM0112	DC	24	2,0	3.100	S2=1,5 min S3=4%ED	↔	IP54	Customer design	IG/O

QUICK

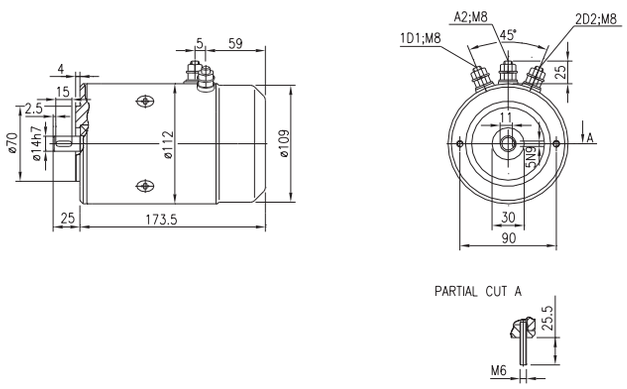

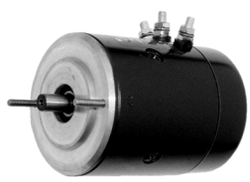

IM0113	DC	12	1,5	2.950	S2=2 min S3=5%ED	↔	IP54	Customer design	IG/O

QUICK

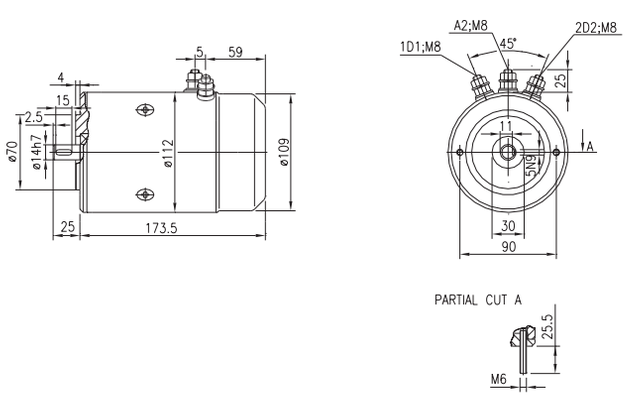

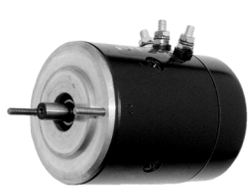

IM0114	DC	24	0,9	1.800	S2=2 min S3=6%ED	↔	IP54	Customer design	IG/O

QUICK

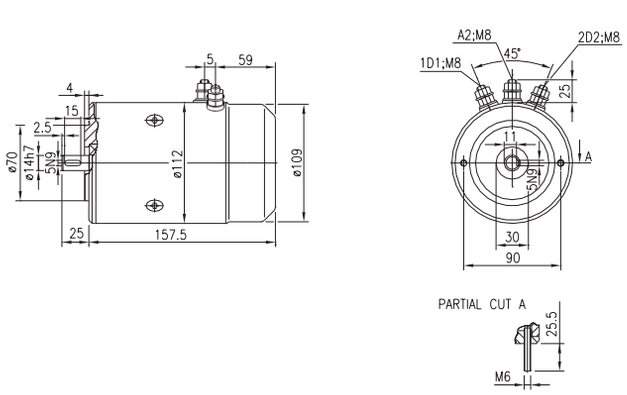

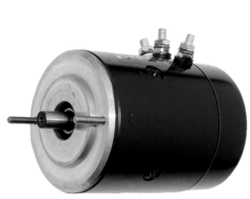

	TY	V	kW	RPM	OP	RO	IP	F	NOTES
IM0115	DC	12	0,7	1.500	S2=2,5 min S3=7%ED	↔	IP54	Customer design	IG/O

QUICK

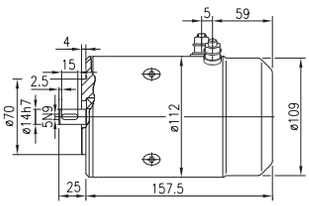

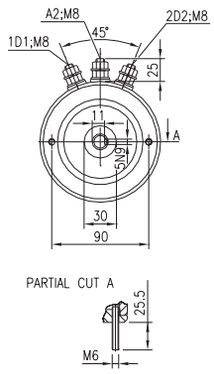

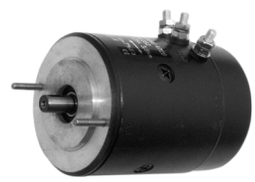

IM0116	DC	24	0,5	2.800	S2=5 min S3=17%ED	↔	IP65	Standard	IG/O

KNORR-BREMSE

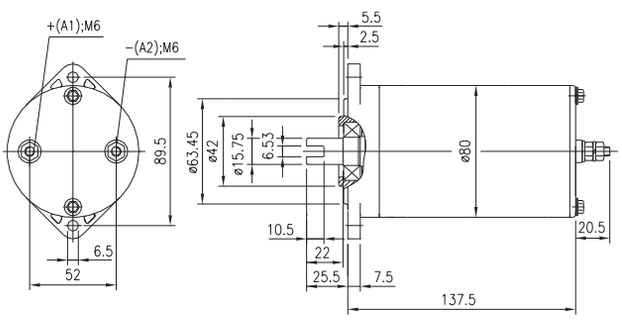

IM0117	DC	12	1,6	2.600	S2=3 min S3=7,5%ED	→	IP54	Customer design	TP/IG/H

SMOES,OIL SISTEM

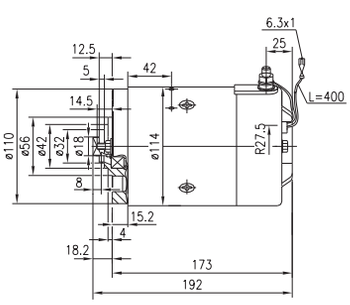

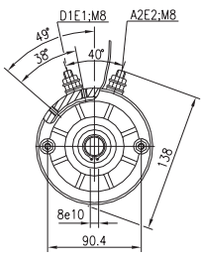

	TY	V	kW	RPM	OP	RO	IP	F	NOTES
IM0118	DC	24	3,0	2.600	S2=4 min S3=15%ED	→	IP43	Transport	IG/H

OIL SISTEM

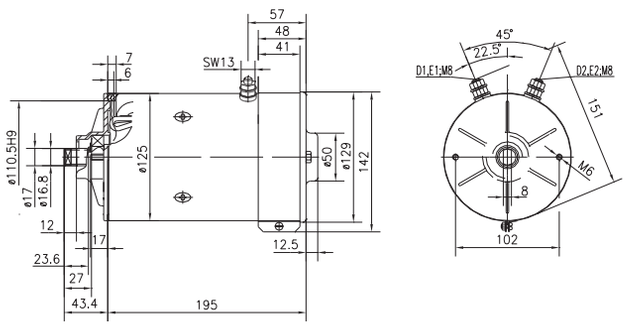

IM0119	DC	12	1,6	2.600	S2=2 min S3=10%ED	←	IP54	Transport	IG/H

MTE,SAVERY,HYDR-APP

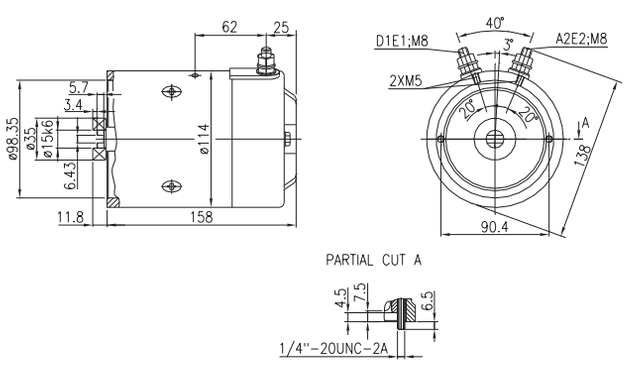

IM0120	DC	24	1,2	5.000	S2=2,5 min S3=8,5%ED	←	IP54	Customer design	IG/H

MIC,HPI

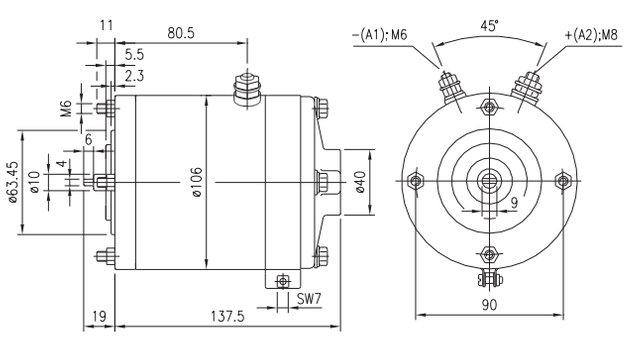

	TY	V	kW	RPM	OP	RO	IP	F	NOTES
IM0121	DC	12	0,5	2.500	S2=5 min S3=17%ED	↔	IP54	Standard	IG/H

SAVERY,BUCHER HYDRAULICS (HIDROIRMA),FLUITRONICS (BERENDSEN),HYDR-APP,OIL SISTEM

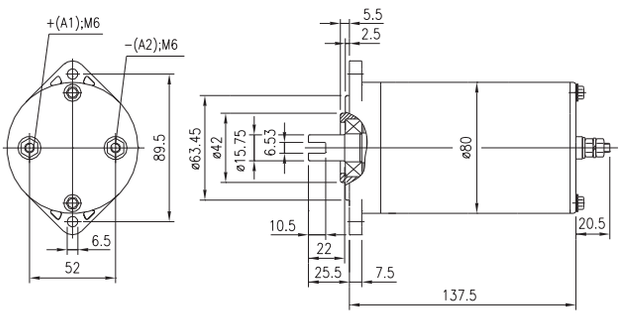

IM0122	DC	24	0,5	2.800	S2=5 min S3=17%ED	↔	IP54	Standard	IG/H

FLUITRONICS (BERENDSEN),OIL SISTEM,TEKNO,HYDROKIT,ATP HYDRAULIK,FAIVELEY TRANSPORT GROUP

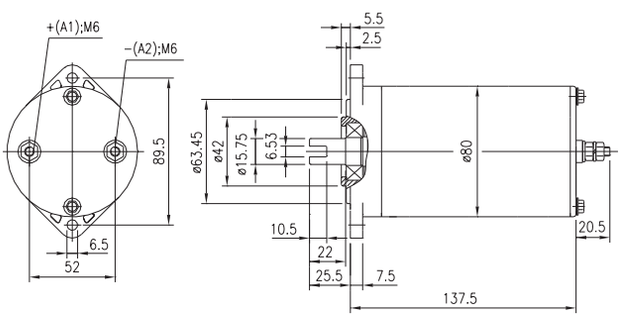

IM0123	DC	12	0,15	1.600	S2=25 min S3=50%ED	→	IP54	Standard	IG/H

FLUITRONICS (BERENDSEN)

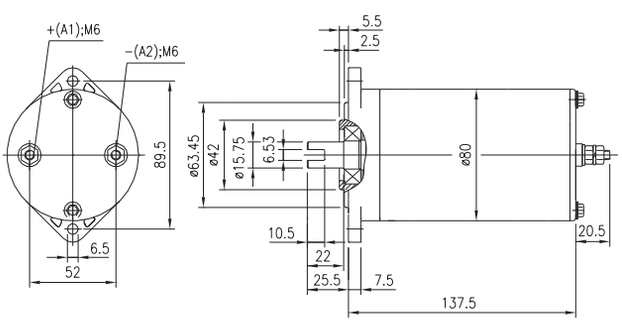

	TY	V	kW	RPM	OP	RO	IP	F	NOTES
IM0124	DC	24	0,8	4.500	S2=4 min S3=10%ED	→	IP54	Standard	IG/H

CONCORD,FLUITRONICS (BERENDSEN)

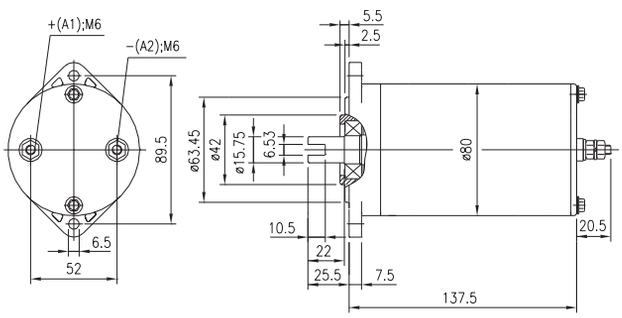

IM0125	DC	24	3,0	3.300	S2=4 min S3=15%ED	←	IP43	Transport	TP/IG/H

EGIL ENGLOAS

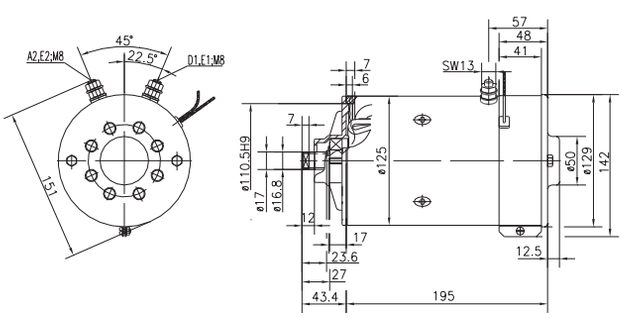

IM0126	DC	12	0,8	3.500	S2=4 min S3=9%ED	↔	IP54	Standard	IG/H

FLUITRONICS (BERENDSEN),OIL SISTEM

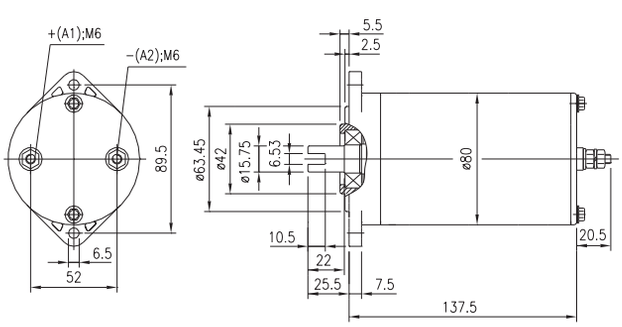

	TY	V	kW	RPM	OP	RO	IP	F	NOTES
IM0127	DC	24	0,8	4.000	S2=2,5 min S3=8%ED	↔	IP54	Standard	IG/H

OIL SISTEM,OLEODINAMICA L.C.

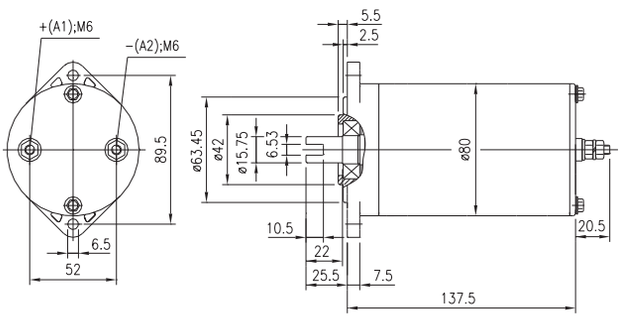

IM0128	DC	12	0,8	4.000	S2=4 min S3=10%ED	→	IP54	Standard	IG/H

HYDAC B.V.,SAVERY,FLUITRONICS (BERENDSEN)

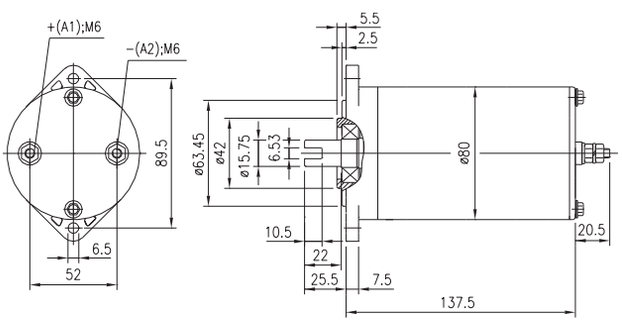

IM0129	DC	12	0,8	4.000	S2=4 min S3=10%ED	←	IP54	Standard	IG/H

OLEODINAMICA REGGIANA

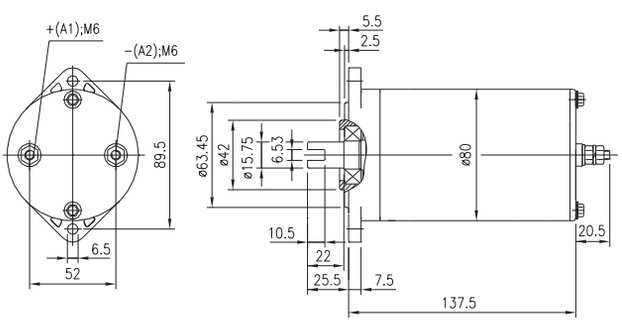

	TY	V	kW	RPM	OP	RO	IP	F	NOTES
IM0130	DC	24	0,8	4.500	S2=4 min S3=10%ED	←	IP54	Standard	IG/H

OLEODINAMICA REGGIANA

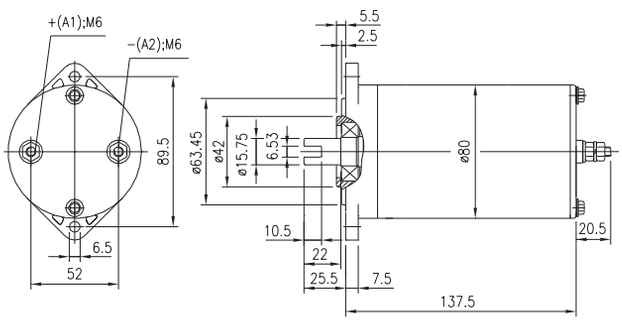

IM0131	DC	48	0,8	4.800	S2=4,5 min S3=16%ED	→	IP54	Standard	IG/H

FLUITRONICS (BERENDSEN),SPX FLUID POWER (FENNER)

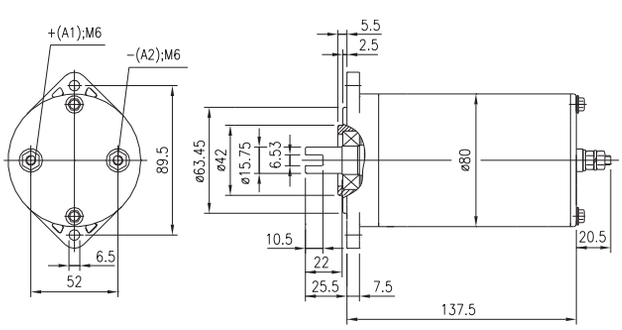

IM0132	DC	12	1,6	2.500	S2=3,5 min S3=12%ED	←	IP54	Transport	IG/H

HALDEX HYDRAULICS

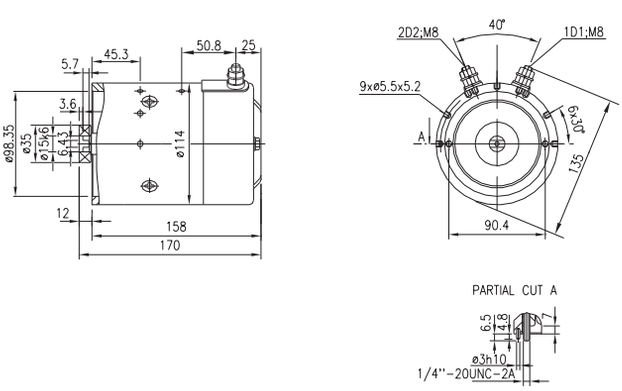

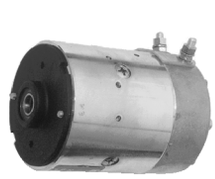

	TY	V	kW	RPM	OP	RO	IP	F	NOTES
IM0133	DC	12	1,6	2.600	S2=3 min S3=7,5%ED	←	IP54	Transport	G/H

HALDEX HYDRAULICS

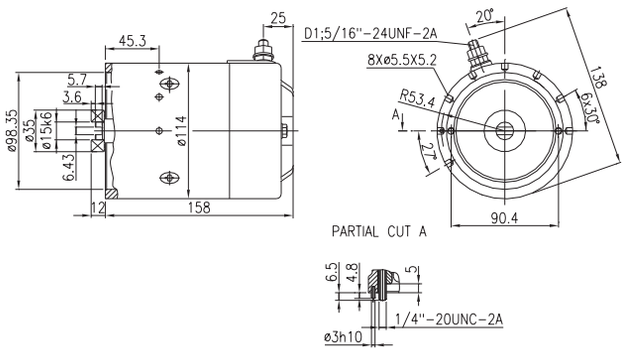

	TY	V	kW	RPM	OP	RO	IP	F	NOTES
IM0134	DC	12	1,6	2.600	S2=3 min S3=7,5%ED	→	IP54	Transport	G/H

HALDEX HYDRAULICS

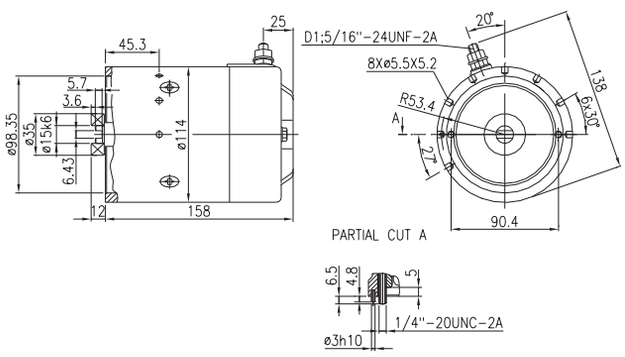

	TY	V	kW	RPM	OP	RO	IP	F	NOTES
IM0135	DC	12	1,7	2.500	S2=1,8 min S3=5%ED	→	IP54	Bosch 60 X 60	IG/H

BOSCH

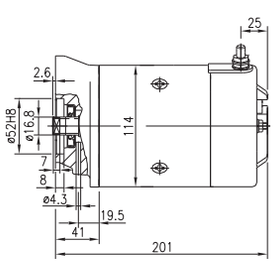

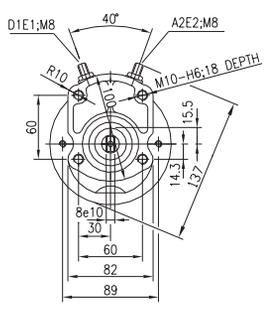

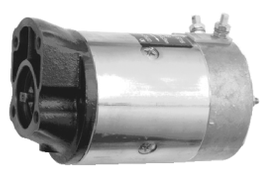

	TY	V	kW	RPM	OP	RO	IP	F	NOTES
IM0136	DC	12	1,6	2.500	S2=1,8 min S3=5%ED	→	IP54	Bosch 40 X 40	TP/IG/H

BOSCH

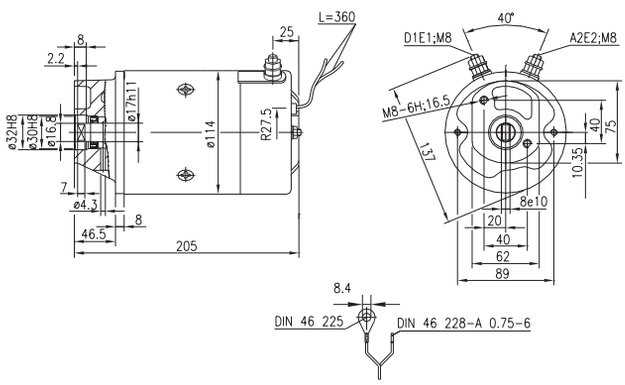

IM0137	DC	24	2,2	4.400	S2=1,5 min S3=8%ED	←	IP54	Transport	IG/H

HALDEX HYDRAULICS

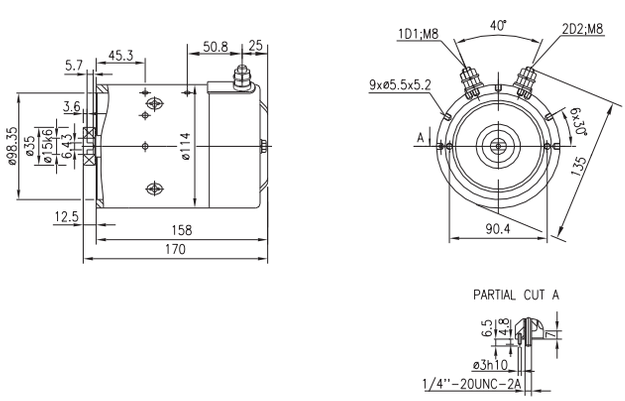

IM0138	DC	24	2,2	2.300	S2=2,5 min S3=7%ED	←	IP54	Transport	IG/H

HALDEX HYDRAULICS

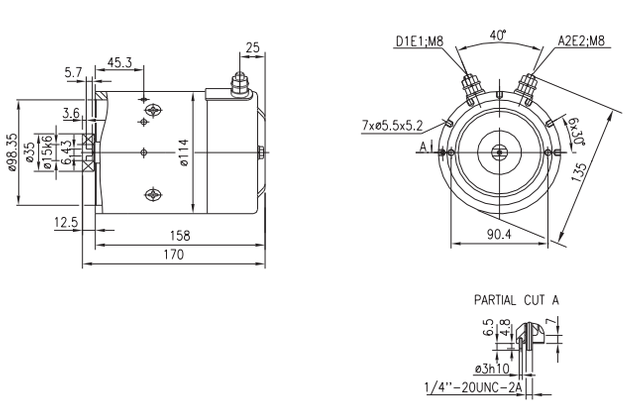

	TY	V	kW	RPM	OP	RO	IP	F	NOTES
IM0139	DC	24	2,2	2.500	S2=1,2 min S3=4%ED	→	IP54	Bosch 60 X 60	TP/IG/H

BOSCH

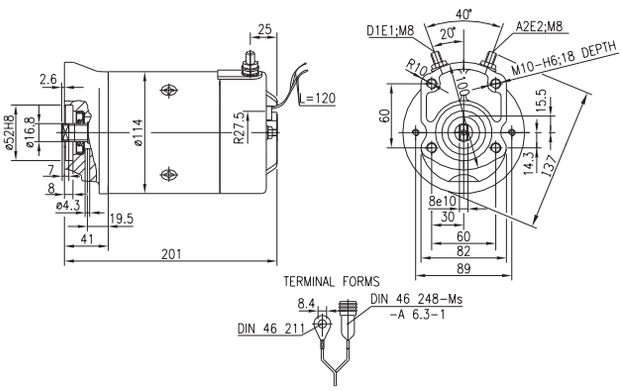

IM0140	DC	24	2,2	2.500	S2=1,2 min S3=4%ED	→	IP54	Bosch 40 X 40	IG/H

BOSCH

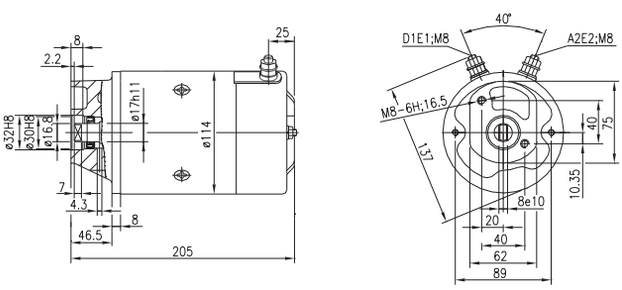

IM0141	DC	24	3,0	1.800	S2=30 min S3=50%ED	←	IP23	Bosch 60 X 60	IG/H/VT

HPI

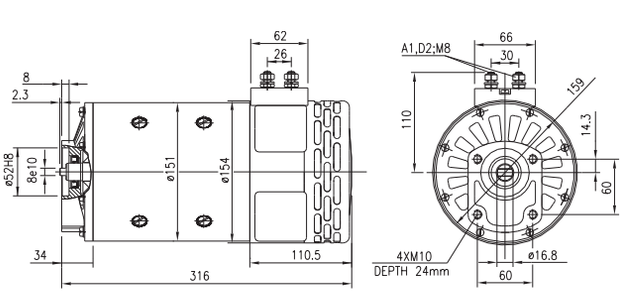

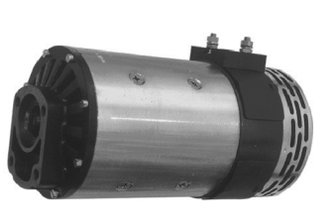

	TY	V	kW	RPM	OP	RO	IP	F	NOTES
IM0142	DC	24	2,2	2.500	S2=1,2 min S3=4%ED	→	IP54	Bosch 40 X 40	TP/IG/H

BOSCH

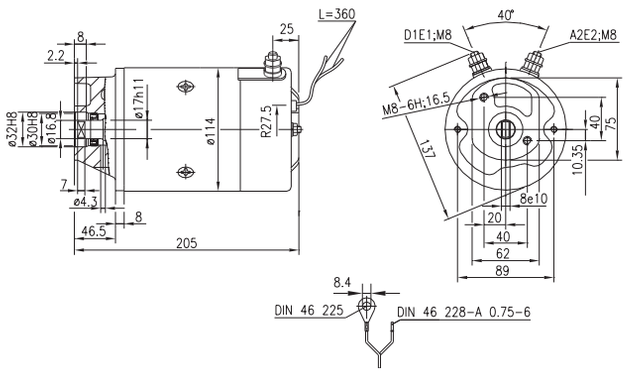

IM0143	DC	24	1,9	4.500	S2=6 min S3=12%ED	←	IP54	Customer design	IG/H/HD

HPI

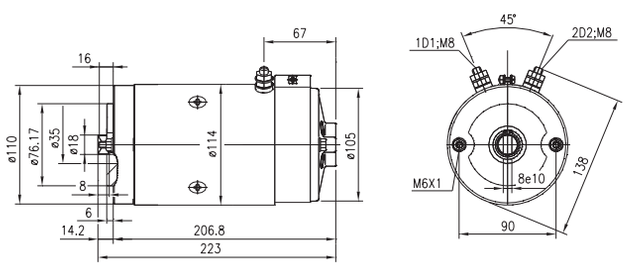

IM0144	DC	24	2,1	2.800	S2=3,5 min S3=8%ED	←	IP54	Customer design	IG/H/HD

HPI

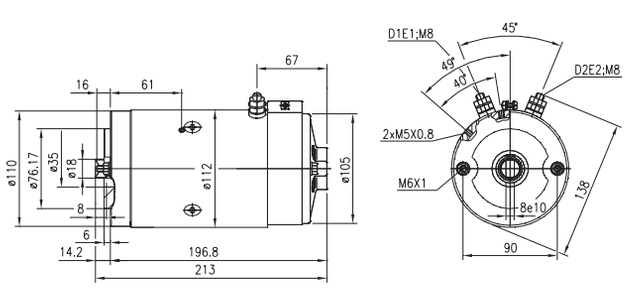

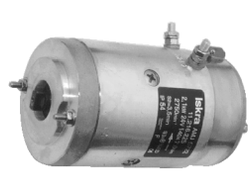

	TY	V	kW	RPM	OP	RO	IP	F	NOTES
IM0145	DC	24	2,2	2.700	S2=1,2 min S3=5%ED	←	IP54	Transport	IG/H

HYDR-APP

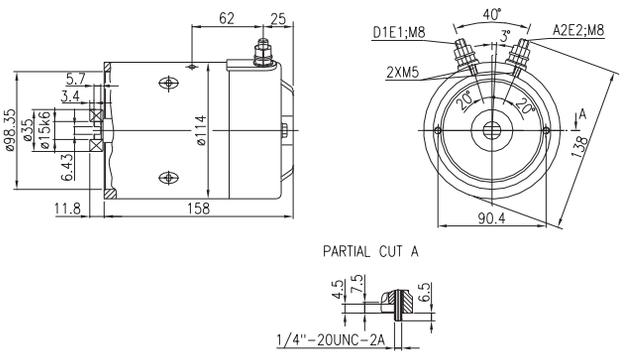

IM0146	DC	12	1,6	2.800		↔	IP44	Transport	G/O

WARN,SUPERWINCH

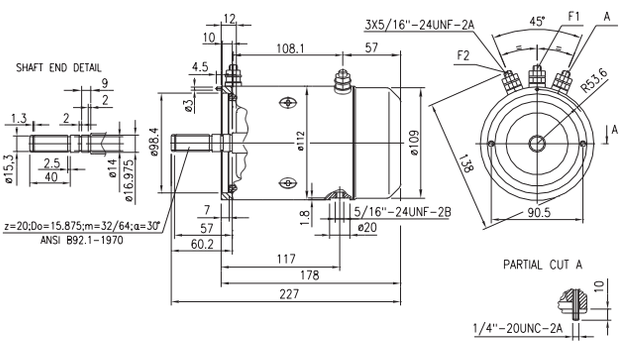

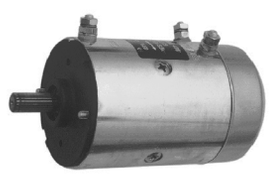

IM0147	DC	24	2,0	2.400		↔	IP44	Transport	G/O

WARN,SUPERWINCH

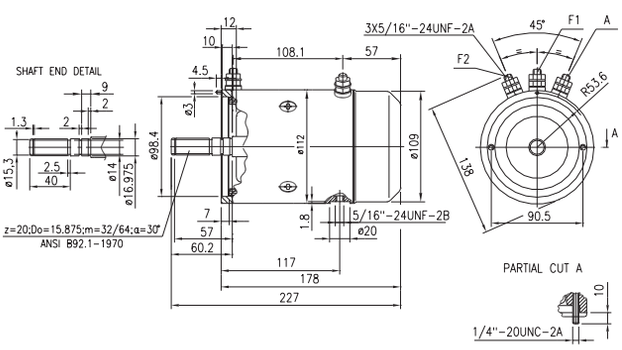

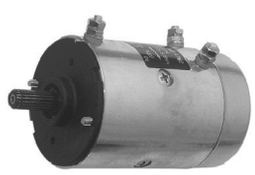

	TY	V	kW	RPM	OP	RO	IP	F	NOTES
IM0148	DC	12	1,5	3.500		↔	IP54	Transport	G/O

SUPERWINCH

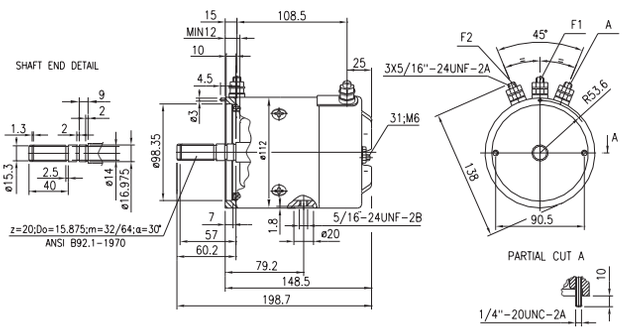

IM0149	DC	24	2,0	3.000		↔	IP54	Transport	G/O

SUPERWINCH

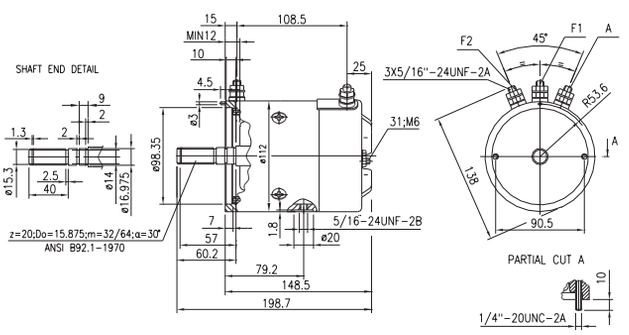

IM0151	DC	12	0,8	4.000	S2=4 min S3=9%ED	←	IP54	Customer design	G/H

MTE,RELATED FLUID POWER

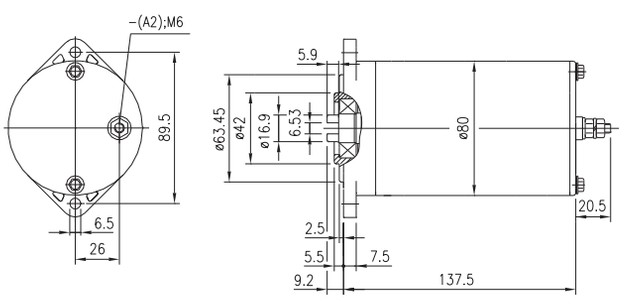

	TY	V	kW	RPM	OP	RO	IP	F	NOTES
IM0152	DC	24	0,8	4.500	S2=4 min S3=10%ED	←	IP54	Customer design	IG/H

MTE,RELATED FLUID POWER

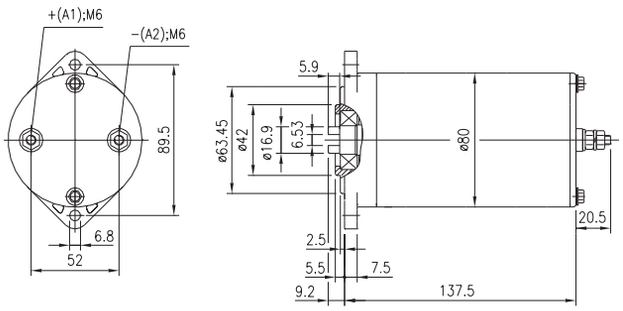

IM0153	DC	12	0,5	2.800	S2=5 min S3=17%ED	←	IP54	Standard	G/H

RELATED FLUID POWER

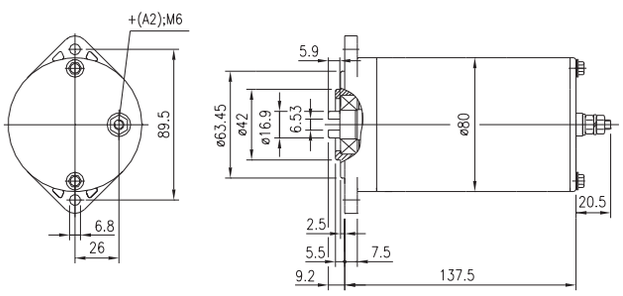

IM0154	DC	24	0,5	3.200	S2=6 min S3=20%ED	←	IP54	Standard	IG/H

RELATED FLUID POWER

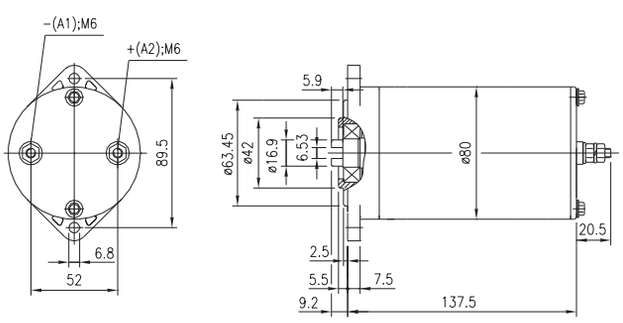

	TY	V	kW	RPM	OP	RO	IP	F	NOTES
IM0155	DC	12	0,5	2.800	S2=5 min S3=17%ED	←	IP54	Customer design	G/H

MONARCH

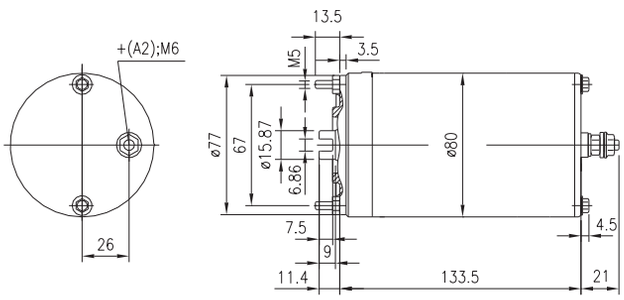

IM0156	DC	24	0,5	3.200	S2=6 min S3=20%ED	←	IP54	Customer design	G/H

MONARCH

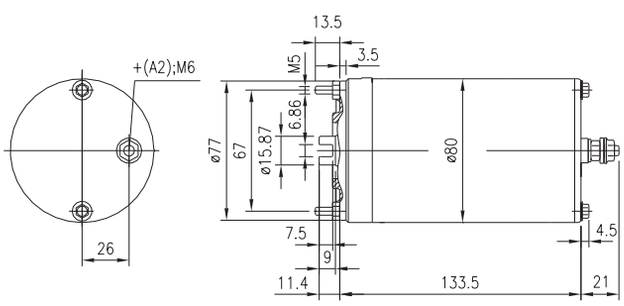

IM0157	DC	24	0,8	4.500	S2=4 min S3=10%ED	←	IP54	Customer design	G/H

MONARCH

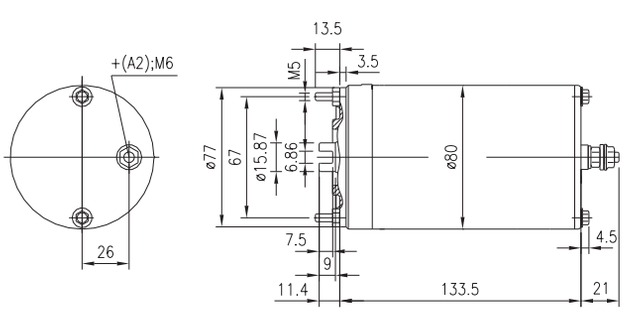

	TY	V	kW	RPM	OP	RO	IP	F	NOTES
IM0158	DC	12	2,4	2.600	S2=1 min S3=8%ED	→	IP43	Transport	TP/IG/H

OIL SISTEM

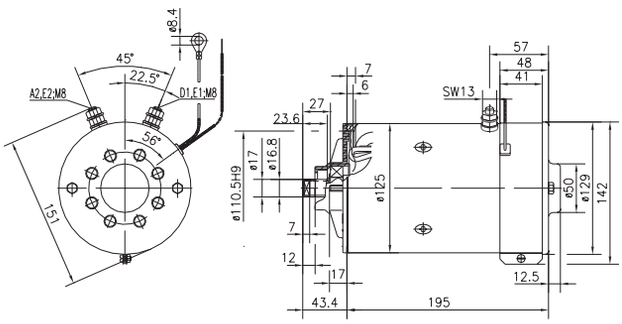

IM0159	DC	12	2,1	1.700	S2=1 min S3=5%ED	←	IP54	Transport	IG/H/HD

MONARCH,HALDEX HYDRAULICS,HYDR-APP

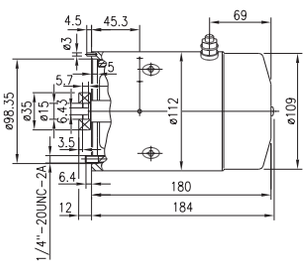

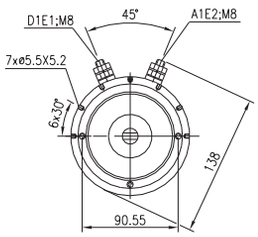

IM0160	DC	80	1,0	2.000	S2=60 min	→	IP23	Bosch 60 X 60	IG/H

SPYKSTAAL

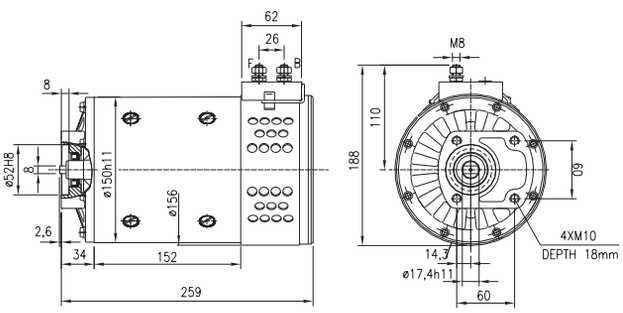

PICTURES NOT AVAILABLE

	TY	V	kW	RPM	OP	RO	IP	F	NOTES
IM0161	DC	24	2,2	2.500	S2=1,2 min S3=4%ED	→	IP54	Bosch Round	IG/H

MBB PALFINGER,BOSCH,JUNGHEINRICH

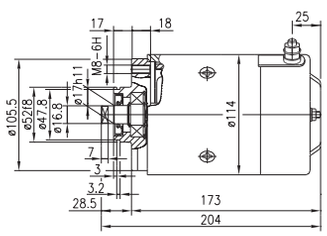

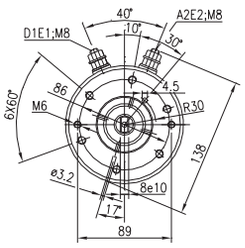

IM0162	DC	24	2,1	2.200	S2=4 min S3=10%ED	←	IP54	Hidroirma	TP/IG/H /HD

ARNE LUNDE

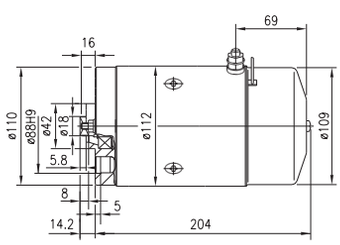

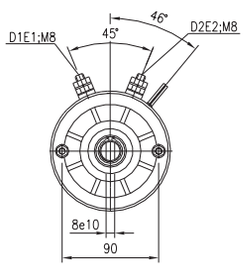

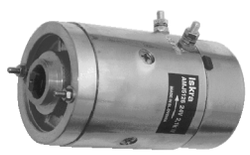

IM0163	DC	24	2,2	2.600	S2=1,8 min S3=5%ED	←	IP54	Customer design	TP/IG/H

HPI

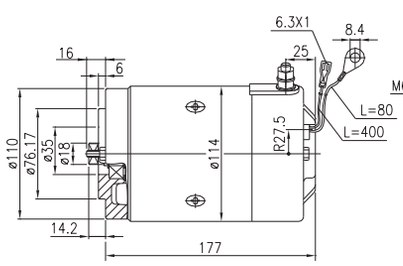

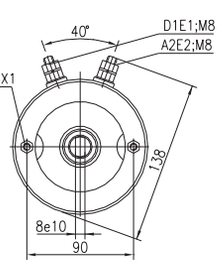

	TY	V	kW	RPM	OP	RO	IP	F	NOTES
IM0164	DC	12	0,8	4.000	S2=4 min S3=9%ED	←	IP54	Customer design	G/H

MONARCH

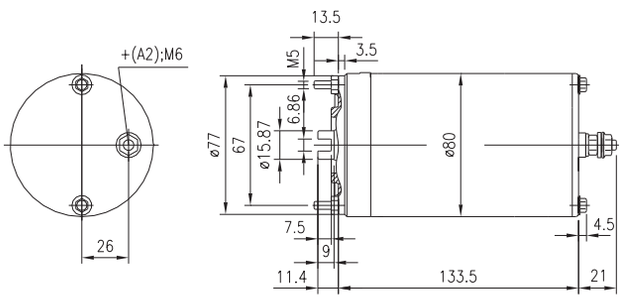

IM0165	DC	24	2,05	3.000	S2=5 min S3=12%ED	→	IP54	Customer design	IG/H

SPX FLUID POWER (FENNER)

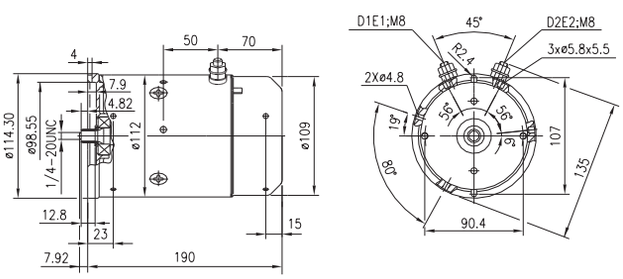

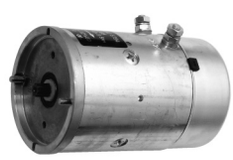

IM0166	DC	24	1,8	3.200	S2=5 min S3=12%ED	→	IP54	Customer design	IG/H

SPX FLUID POWER (FENNER)

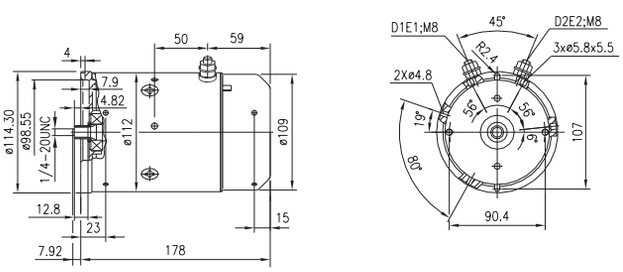

	TY	V	kW	RPM	OP	RO	IP	F	NOTES
IM0167	DC	12	1,6	3.000	S2=3 min S3=7,5%ED	→	IP54	Customer design	G/H

SPX FLUID POWER (FENNER)

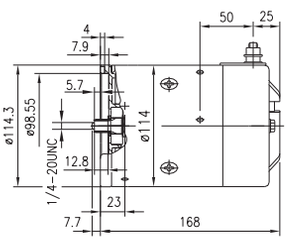

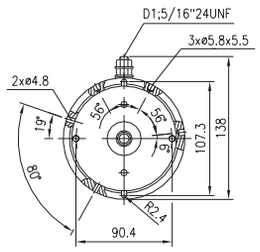

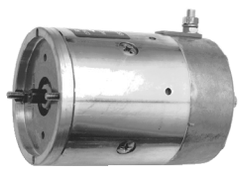

IM0168	DC	24	0,6	3.300	S2=20 min S3=30%ED	↔	IP54	Transport	IG/T

NACCO

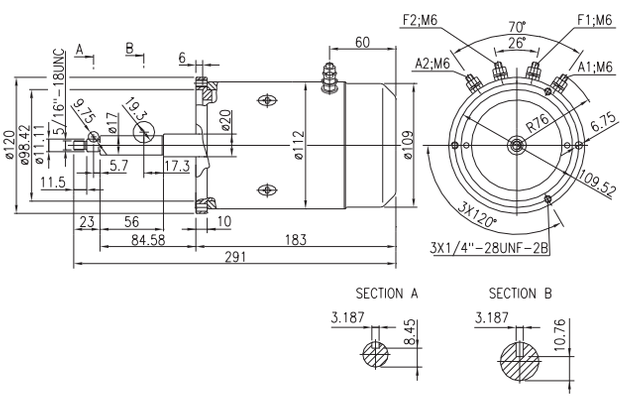

IM0169	DC	24	3,0	3.300	S2=6 min S3=20%ED	→	IP12	Transport	IG/H/VT

OIL SISTEM

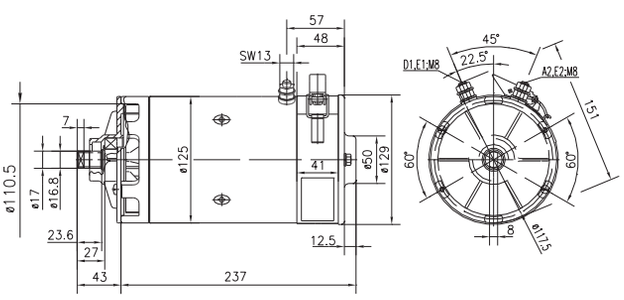

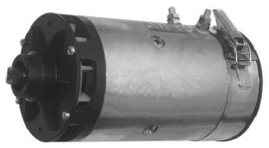

	TY	V	kW	RPM	OP	RO	IP	F	NOTES
IM0170	DC	24	3,0	2.600	S2=4 min S3=15%ED	→	IP43	Transport	TP/IG/H

OIL SISTEM

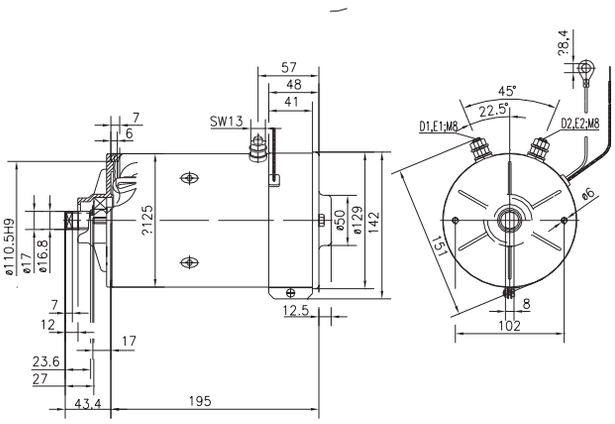

IM0171	DC	12	1,5	2.500	S2=1 min S3=5%ED	→	IP54	Transport	IG/H

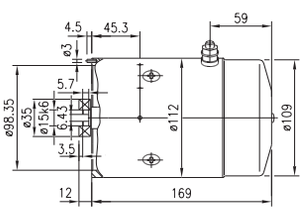

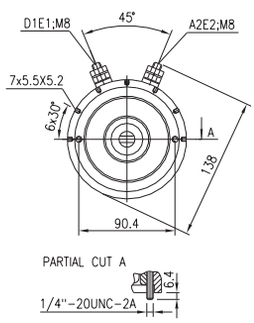

IM0172	DC	12	0,8	4.000	S2=4 min S3=9%ED	→	IP54	Standard	IG/H

SPX FLUID POWER (FENNER)

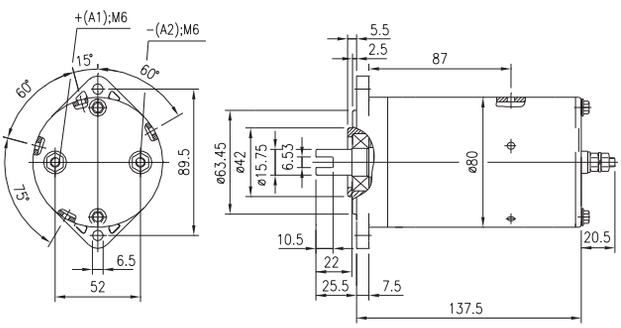

	TY	V	kW	RPM	OP	RO	IP	F	NOTES
IM0173	DC	12	1,5	2.300	S2=1 min S3=5%ED	→	IP44	Hesselman	TP/IG/H

OIL SISTEM

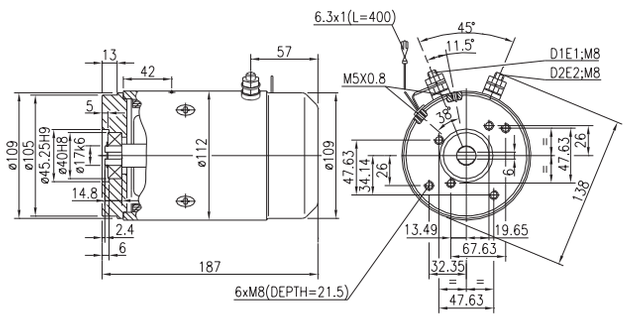

	TY	V	kW	RPM	OP	RO	IP	F	NOTES
IM0174	DC	24	2,0	2.200	S2=2 min S3=5%ED	→	IP44	Hesselman	TP/IG/H

OIL SISTEM

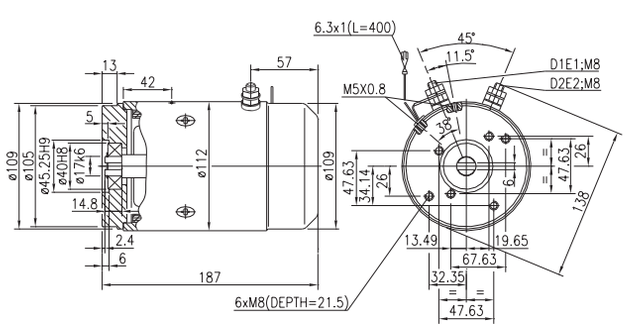

	TY	V	kW	RPM	OP	RO	IP	F	NOTES
IM0175	DC	12	0,8	4.000	S2=4 min S3=9%ED	←	IP54	Standard	TP/IG/H

ADRIACOMMERCE

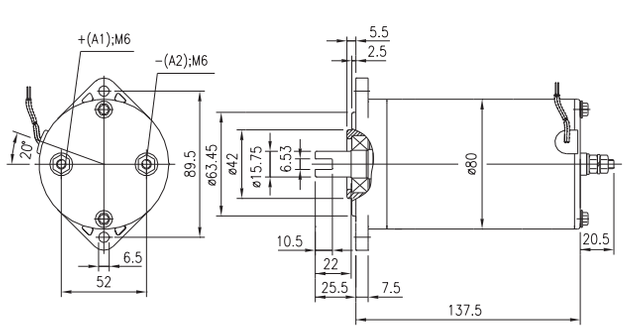

	TY	V	kW	RPM	OP	RO	IP	F	NOTES
IM0176	DC	12	0,8	4.000	S2=4 min S3=9%ED	←	IP54	Customer design	IG/H

HIDROTECHNIQUE

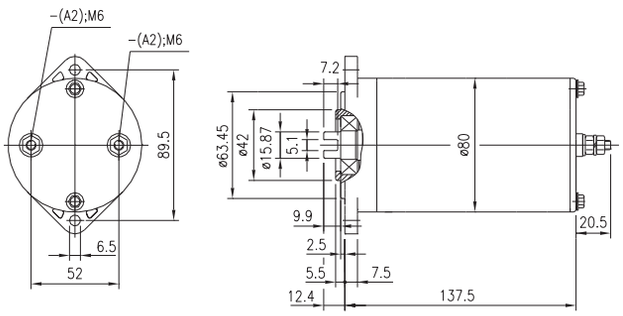

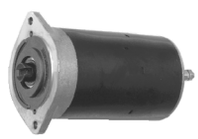

	TY	V	kW	RPM	OP	RO	IP	F	NOTES
IM0177	DC	24	0,8	4.500	S2=4 min S3=10%ED	←	IP54	Customer design	IG/H

HIDROTECHNIQUE

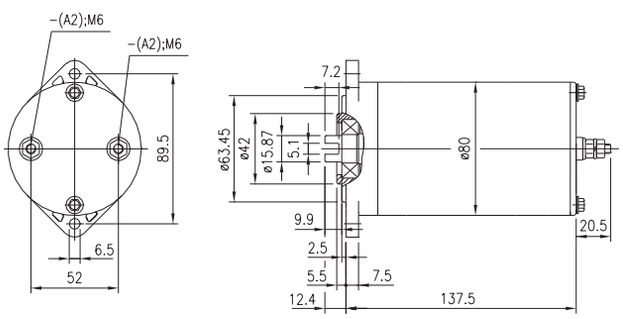

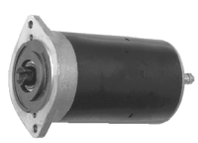

	TY	V	kW	RPM	OP	RO	IP	F	NOTES
IM0178	DC	12	0,7	1.500	S2=2,5 min S3=7%ED	↔	IP54	Transport	TP/IG/O

LEWMAR MARINE

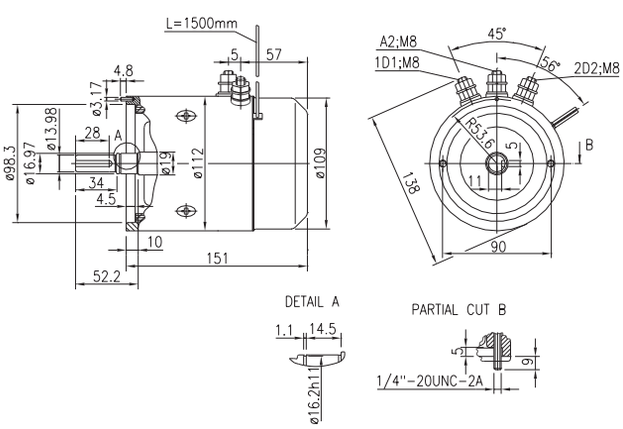

	TY	V	kW	RPM	OP	RO	IP	F	NOTES
IM0179	DC	24	0,9	1.800	S2=2 min S3=6%ED	↔	IP54	Transport	TP/IG/O

LEWMAR MARINE

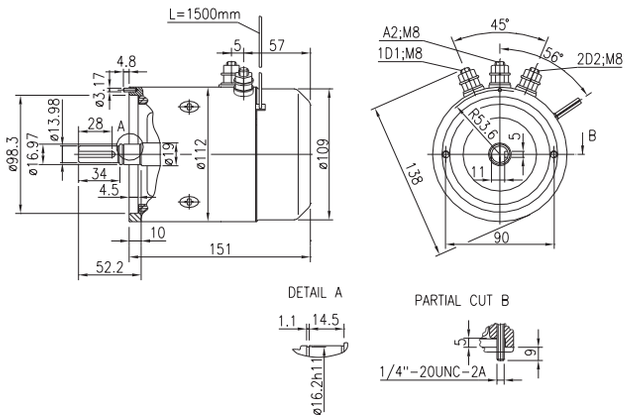

IM0180	DC	48	11,5	2.050	S2=4 min S3=20%ED	→	IP22	Customer design	TP/IG/H /VT

MCF

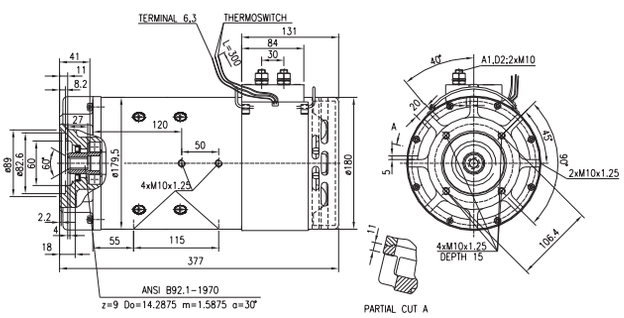

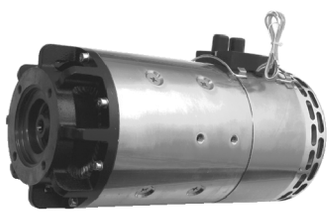

IM0181	DC	24	3,0	2.600	S2=4 min S3=15%ED	→	IP43	Bosch 40 X 40	IG/H

BOSCH,FLUITRONICS (BERENDSEN)

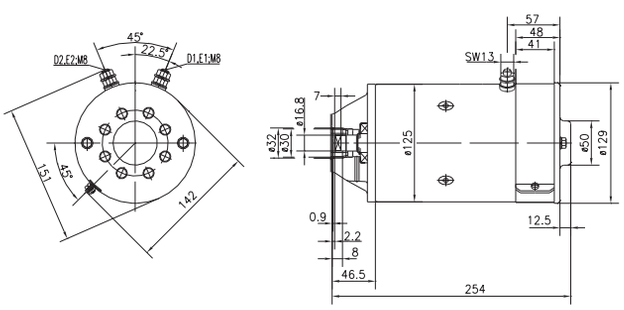

	TY	V	kW	RPM	OP	RO	IP	F	NOTES
IM0182	DC	24	0,8	4.500	S2=4 min S3=10%ED	←	IP54	Standard	TP/IG/H

ADRIACOMMERCE,HYDROVEN

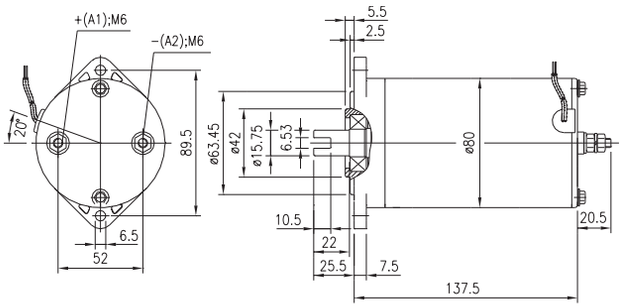

IM0183	DC	12	2,1	1.500	S2=1 min S3=5%ED	→	IP54	Hidroirma	IG/H/HD

OLEODINAMICA L.C.

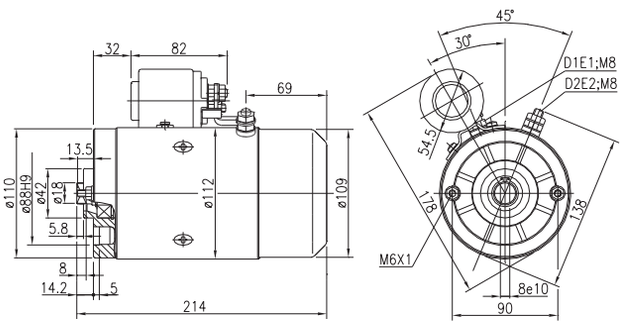

IM0184	DC	24	3,0	2.600	S2=4min S3=15%ED	→	IP44	Hidroirma	IG/H

BUCHER HYDRAULICS (HIDROIRMA)

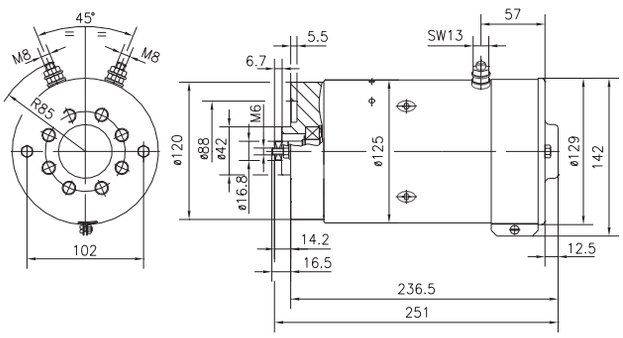

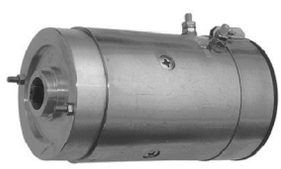

	TY	V	kW	RPM	OP	RO	IP	F	NOTES
IM0185	DC	12	1,4	2.800	S2=3,5 min S3=12%ED	→	IP54	Customer design	IG/H

SPX FLUID POWER (FENNER)

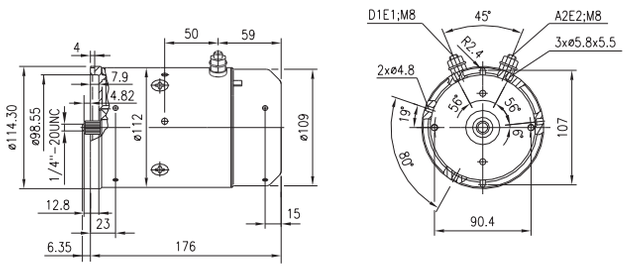

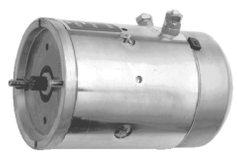

	TY	V	kW	RPM	OP	RO	IP	F	NOTES
IM0186	DC	12	1,5	2.300	S2=4 min S3=14%ED	→	IP23	Customer design	IG/H/VT

MERLO,HYDROVEN,OIL SISTEM

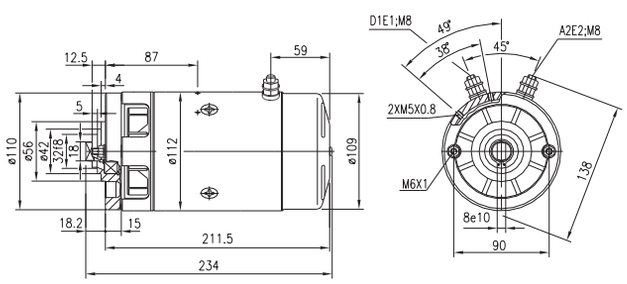

	TY	V	kW	RPM	OP	RO	IP	F	NOTES
IM0187	DC	48	2,0	2.500	S2=2,6 min S3=7%ED	→	IP43	Bosch Round	IG/H

BOSCH

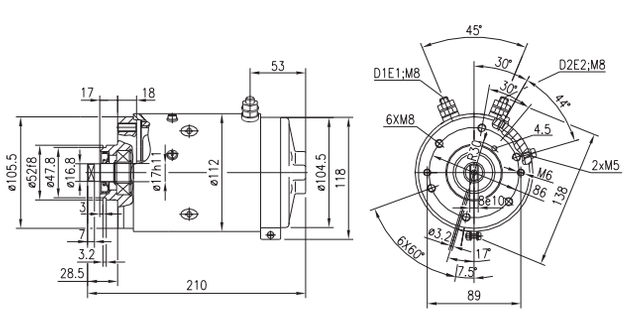

	TY	V	kW	RPM	OP	RO	IP	F	NOTES
IM0188	DC	12	1,5	2.500	S2=1 min S3=5%ED	→	IP43	Bosch Round	IG/H

BOSCH

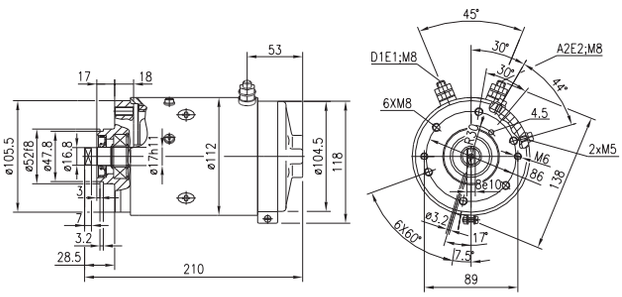

IM0189	DC	48	2,0	2.500	S2=2,6 min S3=7%ED	→	IP43	Bosch 60 X 60	TP/IG/H

BOSCH

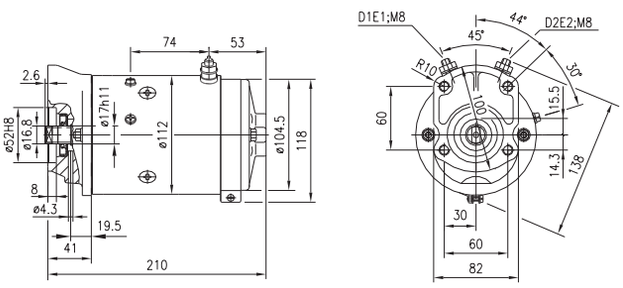

IM0190	DC	24	2,0	2.200	S2=2 min S3=5%ED	→	IP43	Bosch 40 X 40	TP/IG/H

BOSCH

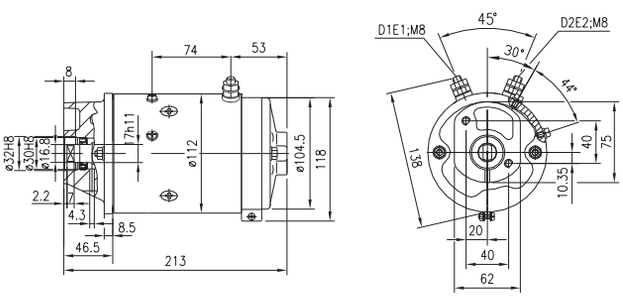

PICTURES NOT AVAILABLE

	TY	V	kW	RPM	OP	RO	IP	F	NOTES
IM0191	DC	24	0,5	2.800	S2=5 min S3=17%ED	↔	IP65	Standard	IG/H

BUCHER HYDRAULICS (HIDROIRMA),HYDROVEN,OIL SISTEM

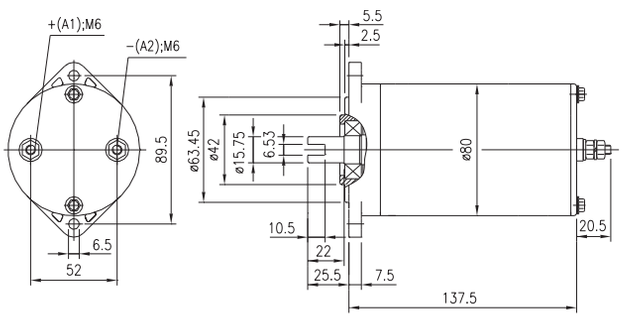

IM0192	DC	12	0,15	1.600	S2=25 min S3=50%ED	↔	IP65	Standard	IG/H

HYDAC B.V.,HYDAC FLUIDTECHNIK,OIL SISTEM

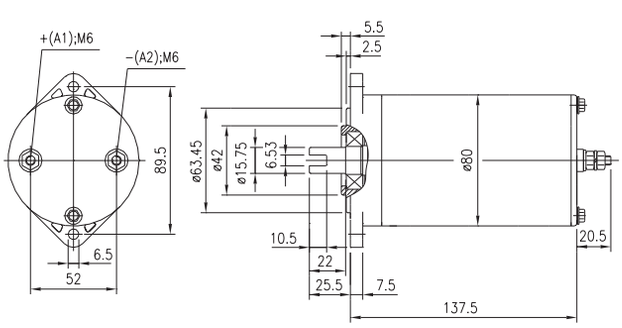

IM0193	DC	24	2,1	2.200	S2=4 min S3=10%ED	→	IP54	Hidroirma	IG/H/HD

OLEODINAMICA L.C.

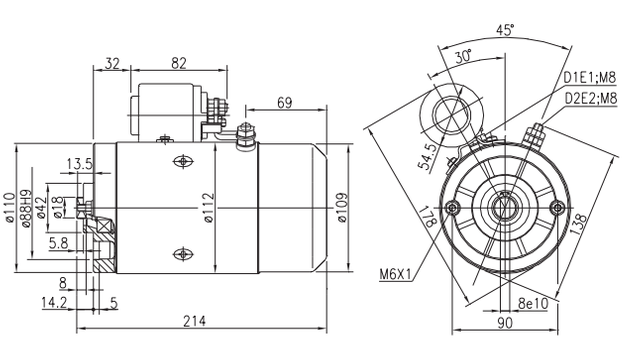

	TY	V	kW	RPM	OP	RO	IP	F	NOTES
IM0194	DC	24	0,8	4.500	S2=4 min S3=10%ED	→	IP54	Standard	TP/IG/H

HYDAC FLUIDTECHNIK,MONTEC

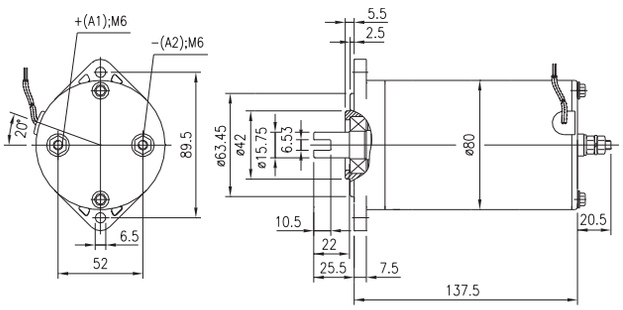

IM0195	DC	12	0,8	4.000	S2=4 min S3=9%ED	→	IP54	Standard	TP/IG/H

MONTEC

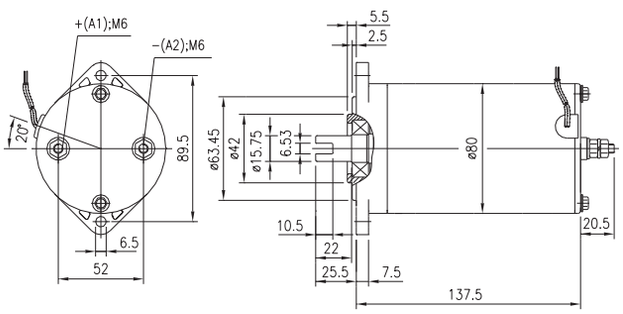

IM0196	DC	12	0,8	4.000	S2=4 min S3=10%ED	→	IP54	Customer design	IG/H

SPX FLUID POWER (SMITHS),FLUIDLINK HYDRAULICS LTD

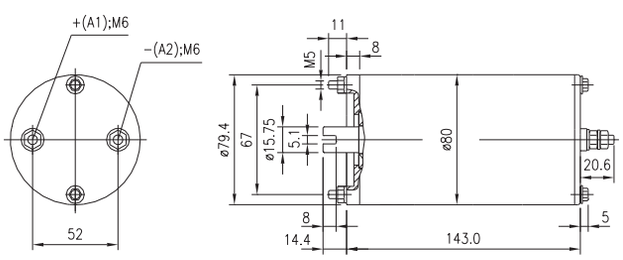

	TY	V	kW	RPM	OP	RO	IP	F	NOTES
IM0197	DC	24	0,8	4.500	S2=4 min S3=10%ED	→	IP54	Customer design	IG/H

SPX FLUID POWER (SMITHS),FLUIDLINK HYDRAULICS LTD

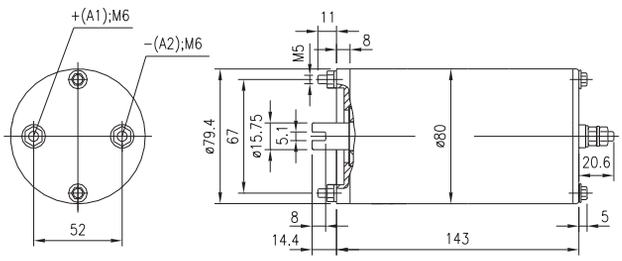

IM0198	DC	24	0,9	3.000	S1	↔	IP23	Customer design	IG/T/VT

TEKNO

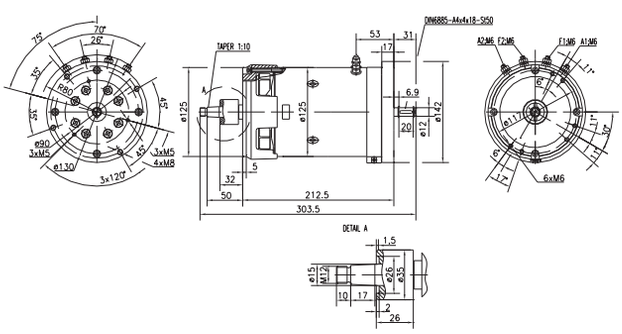

IM0200	DC	24	2,2	2.750	S2=1,2 min S3=4,5%ED	←	IP54	Customer design	IG/H

RELATED FLUID POWER

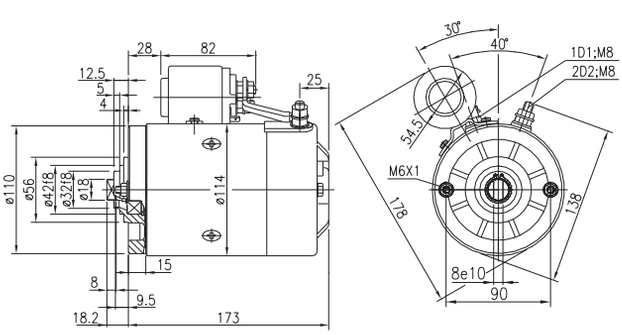

	TY	V	kW	RPM	OP	RO	IP	F	NOTES
IM0201	DC	48	0,8	5.000	S2=4,5 min S3=16%ED	←	IP54	Standard	IG/H

HYDR-APP

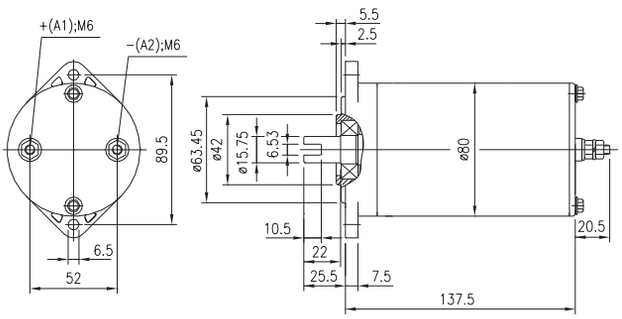

IM0202	DC	24	0,9	3.000	S1	↔	IP23	Customer design	IG/T/VT

TEKNO

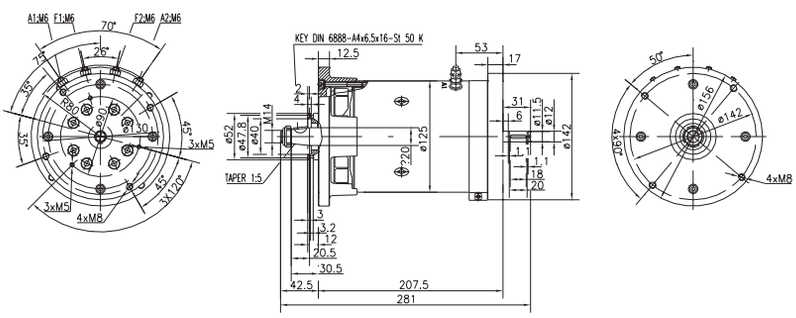

IM0203	DC	12	1,6	2.600	S2=2 min S3=10%ED	←	IP54	Transport	IG/H

HYDR-APP

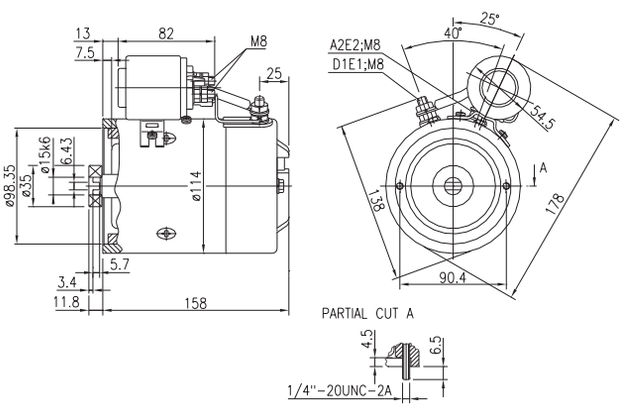

	TY	V	kW	RPM	OP	RO	IP	F	NOTES
IM0204	DC	24	2,2	2.700	S2=1,2 min S3=5%ED	←	IP54	Transport	IG/H

HYDR-APP

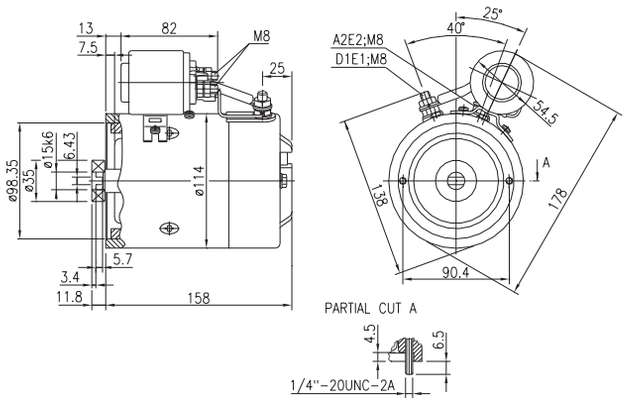

IM0205	DC	24	3,0	1.600	S1	→	IP24	Bosch 60 X 60	IG/H/VT

FIAT-OM-CARELLI-ELEVATORI

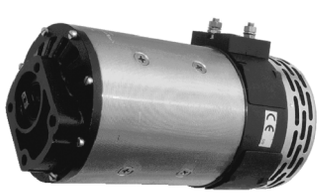

IM0206	DC	24	2,6	2.200	S2=60 min	↔	IP22	Shaft-both end	IG/T/VT

ZF-GOTHA

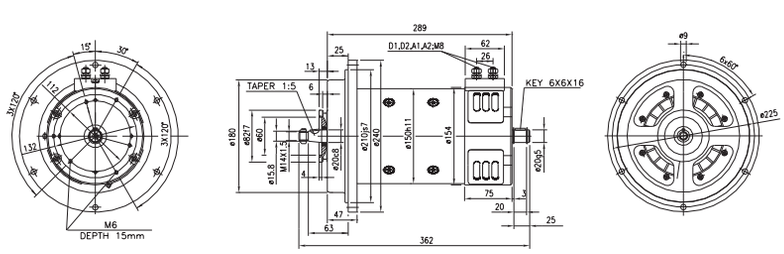

	TY	V	kW	RPM	OP	RO	IP	F	NOTES
IM0207	DC	24	2,2	2.600	S2=1,8 min S3=5%ED	←	IP54	Hidroirma	TP/IG/H

K.G. KLINGA

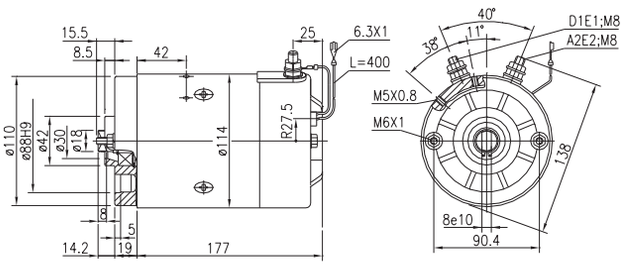

IM0208	DC	12	1,9	2.750	S2=3,5 min S3=12%ED	→	IP54	Customer design	G/H/HD

SPX FLUID POWER (FENNER)

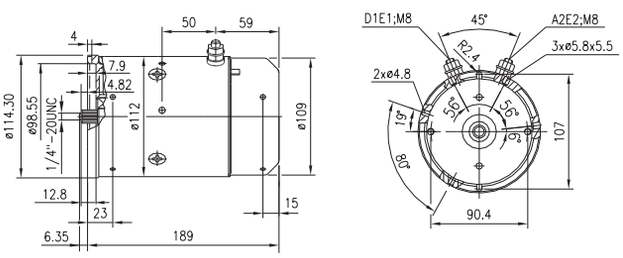

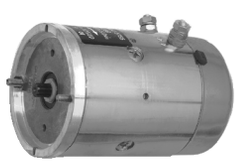

IM0209	DC	12	0,8	3.500	S2=4 min S3=10%ED	↔	IP54	Customer design	IG/H

SPX FLUID POWER (SMITHS),FLUIDLINK HYDRAULICS LTD

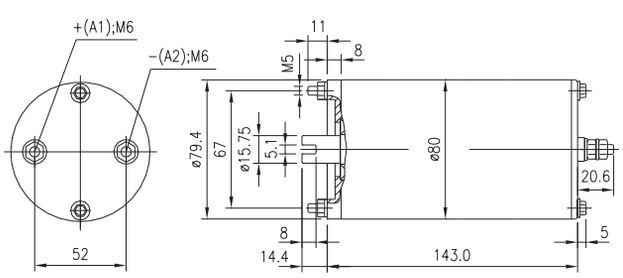

	TY	V	kW	RPM	OP	RO	IP	F	NOTES
IM0210	DC	24	0,8	4.000	S2=2,5 min S3=8%ED	↔	IP54	Customer design	IG/H

SPX FLUID POWER (SMITHS),FLUIDLINK HYDRAULICS LTD

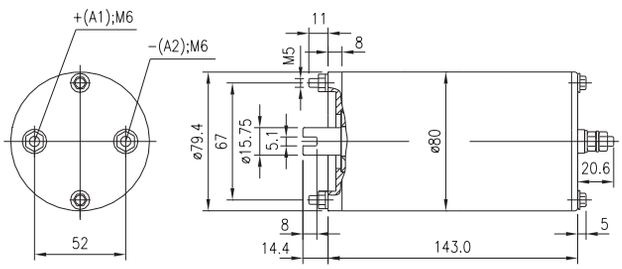

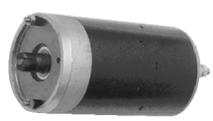

	TY	V	kW	RPM	OP	RO	IP	F	NOTES
IM0211	DC	24	0,5	3.200	S2=6 min S3=20%ED	→	IP54	Customer design	IG/H

SPX FLUID POWER (SMITHS),FLUIDLINK HYDRAULICS LTD

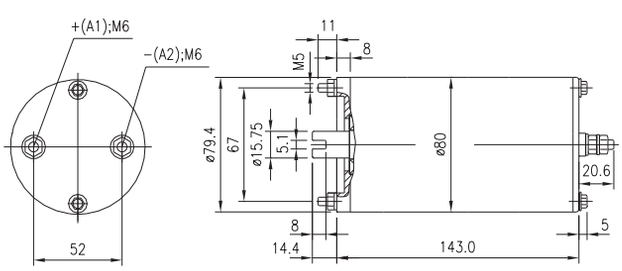

	TY	V	kW	RPM	OP	RO	IP	F	NOTES
IM0212	DC	12	0,5	2.500	S2=5 min S3=17%ED	↔	IP65	Customer design	IG/O

LEWMAR MARINE

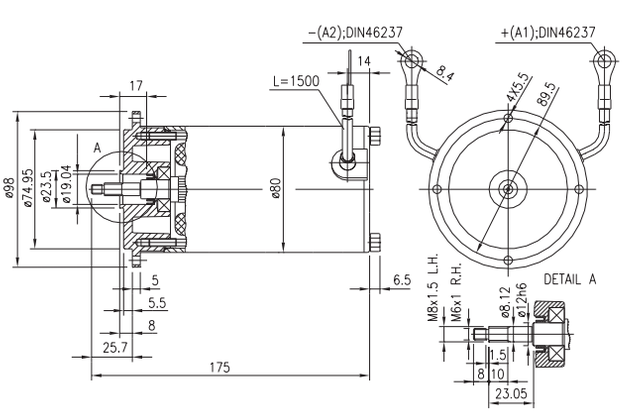

	TY	V	kW	RPM	OP	RO	IP	F	NOTES
IM0213	DC	12	0,35	1.450	S2=2 min S3=9%ED	↔	IP65	Customer design	IG/O

LEWMAR MARINE

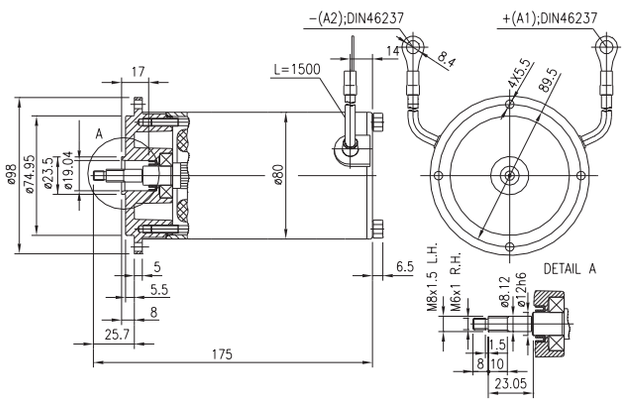

IM0214	DC	12	0,8	3.600	S2=5 min S3=15%ED	←	IP54	Customer design	G/H

MONARCH

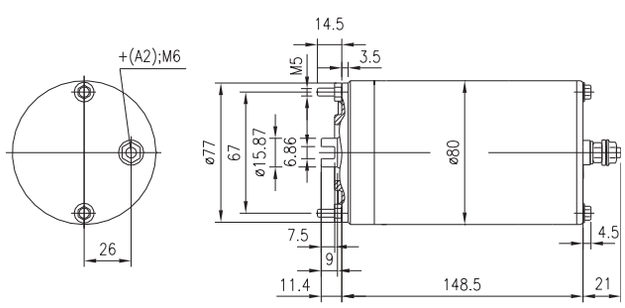

IM0216	DC	12	1,2	2.900	S2=1,3 min S3=4,5%ED	←	IP54	Transport	G/H

MONARCH,BUCHER HYDRAULICS

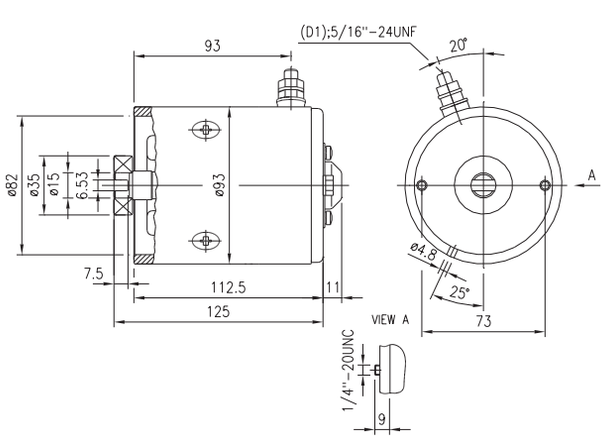

	TY	V	kW	RPM	OP	RO	IP	F	NOTES
IM0218	DC	12	1,5	2.300	S2=4 min S3=14%ED	→	IP23	Bosch 40 X 40	IG/H/VT

BOSCH

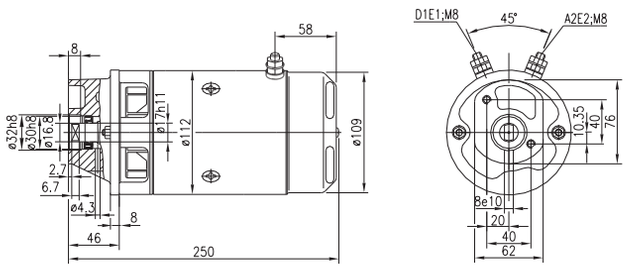

IM0219	DC	12	2,1	1.500		↔	IP44	Transport	G/O/HD

SUPERWINCH

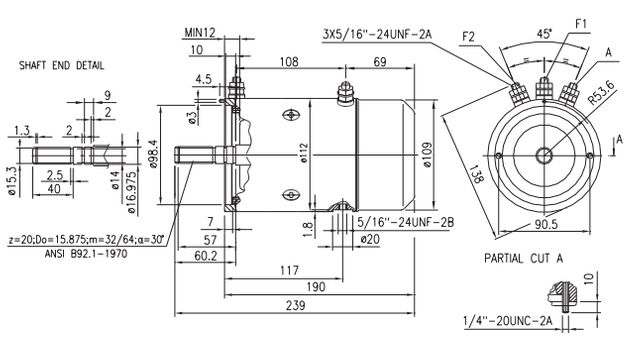

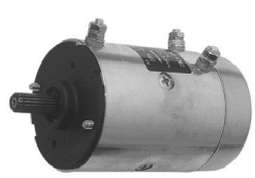

IM0220	DC	12	1,6	1.500		↔	IP54	Transport	TP/IG/O

LEWMAR MARINE

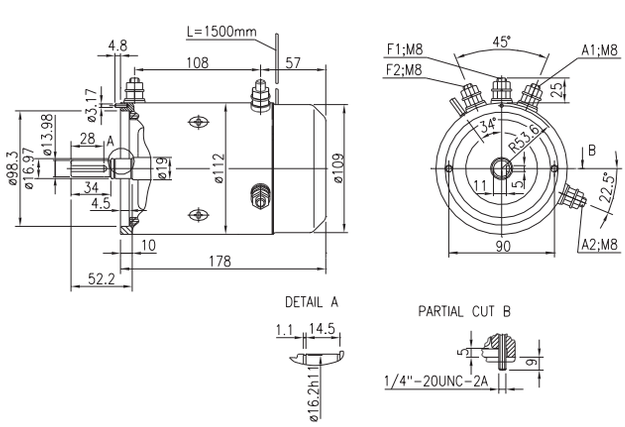

	TY	V	kW	RPM	OP	RO	IP	F	NOTES
IM0221	DC	12	2,1	2.100	S2=2,2 min S3=6%ED	←	IP54	Customer design	IG/H/HD

HPI

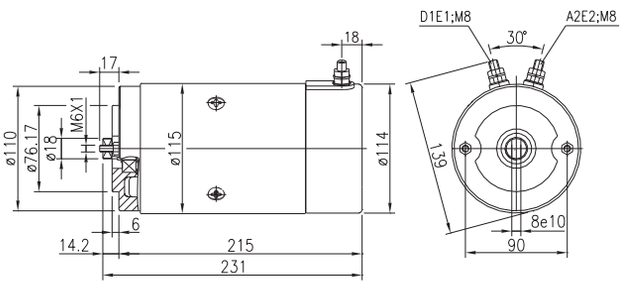

	TY	V	kW	RPM	OP	RO	IP	F	NOTES
IM0222	DC	12	1,6	1.800	S2=2,5 min S3=8%ED	←	IP54	Transport	G/H

MONARCH,BUCHER HYDRAULICS

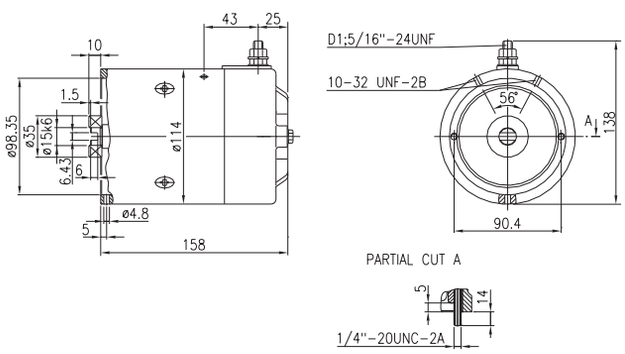

	TY	V	kW	RPM	OP	RO	IP	F	NOTES
IM0223	DC	12	1,5	1.500		↔	IP65	Transport	G/O

SUPERWINCH

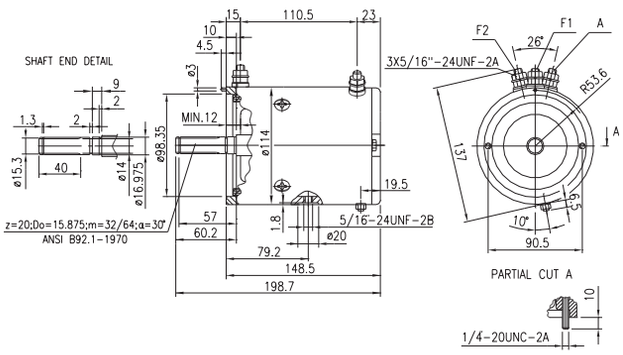

	TY	V	kW	RPM	OP	RO	IP	F	NOTES
IM0224	DC	12	2,1	2.000	S2=2,2 min S3=6%ED	←	IP54	Customer design	TP/IG/H /HD

HPI

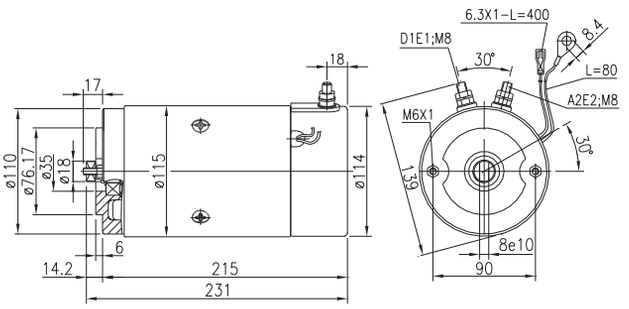

IM0225	DC	24	2,1	1.500		↔	IP44	Transport	G/O/HD

SUPERWINCH

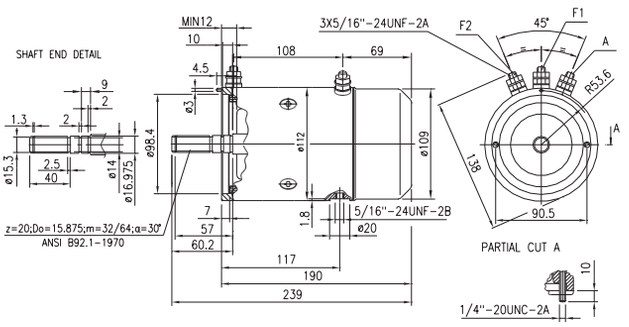

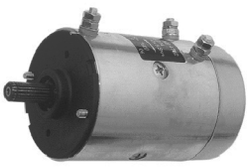

IM0226	DC	24	2,0	1.650		↔	IP54	Transport	TP/IG/O

LEWMAR MARINE

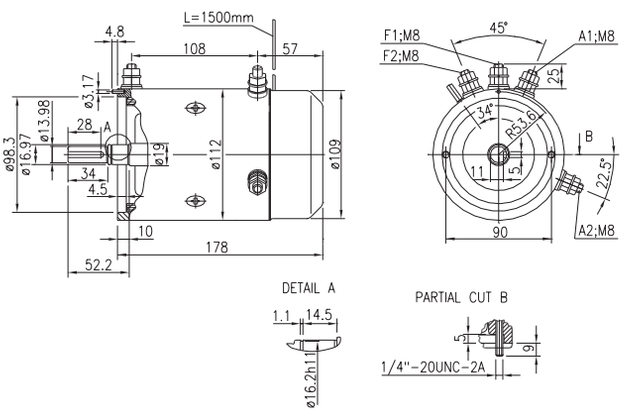

	TY	V	kW	RPM	OP	RO	IP	F	NOTES
IM0227	DC	24	2,0	3.150		↔	IP65	Transport	G/O

SUPERWINCH

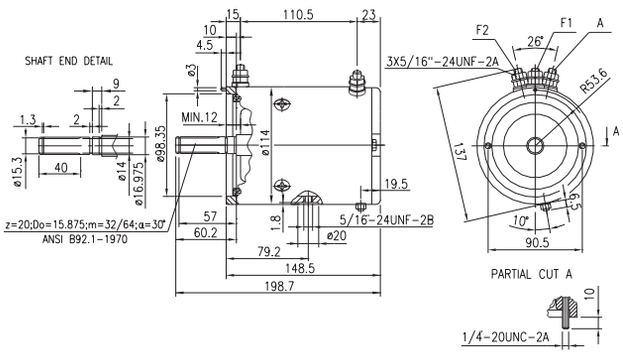

IM0228	DC	12	1,6	3.000		↔	IP54	Customer design	TP/IG/O

LEWMAR MARINE

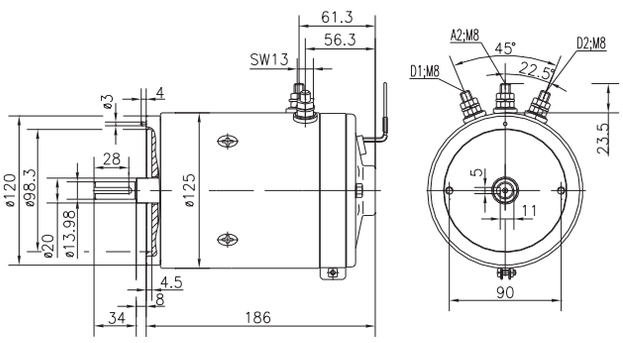

IM0229	DC	24	2,0	2.000		↔	IP54	Customer design	TP/IG/O

LEWMAR MARINE

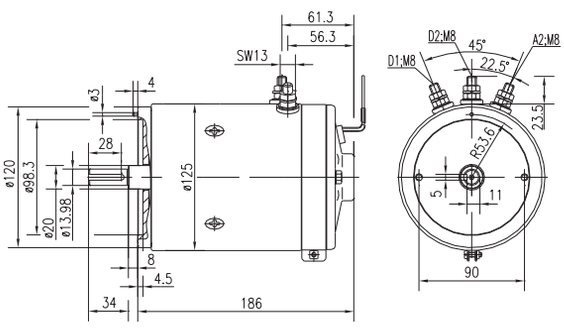

	TY	V	kW	RPM	OP	RO	IP	F	NOTES
IM0230	DC	48	3,0	2.500	S2=2 min S3=5%ED	→	IP43	Bosch Round	IG/H

BOSCH

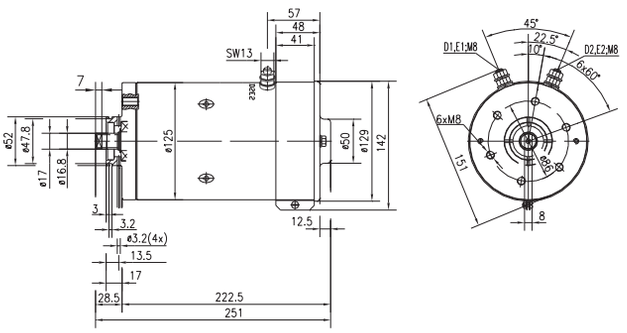

PICTURES NOT AVAILABLE

IM0231	DC	48	3,0	2.500	S2=2 min S3=5%ED	→	IP43	Transport	IG/H

SPX FLUID POWER (SMITHS)

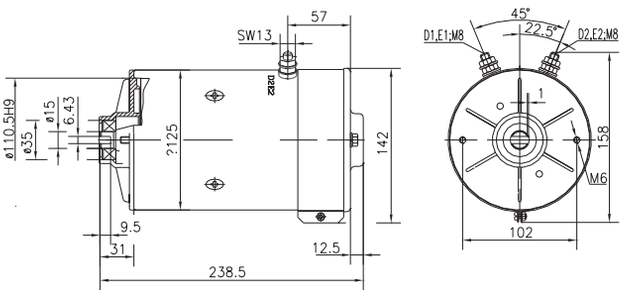

IM0232	DC	48	2,0	2.500	S2=2,6 min S3=7%ED	→	IP54	Customer design	IG/H

OIL SISTEM

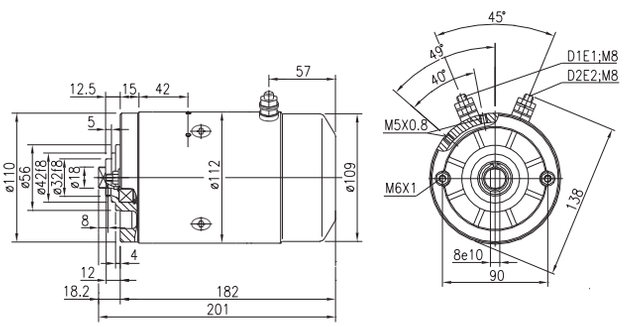

	TY	V	kW	RPM	OP	RO	IP	F	NOTES
IM0233	DC	24	2,0	2.800	S2=1,5 min S3=4%ED	⟷	IP54	Customer design	IG/H

OIL SISTEM

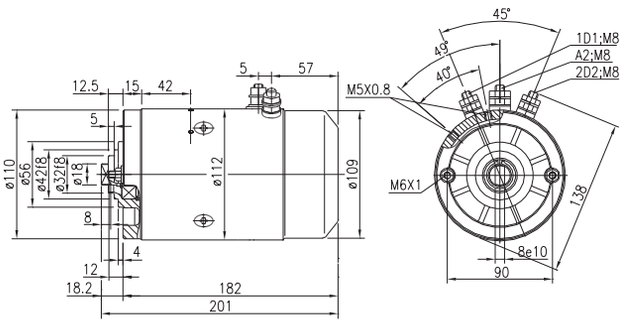

IM0234	DC	36	6,9	2.050	S2=21 min S3=40%ED	⟵	IP22	Customer design	TP/IG/H /VT

NACCO

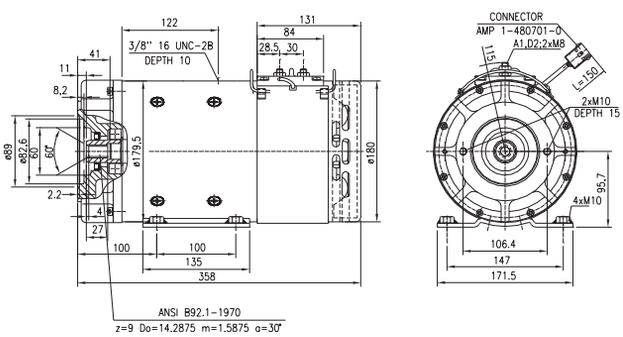

IM0235	DC	48	1,0	1.300	S2=60 min S3=100%ED	⟷	IP12	Customer design	IG/O

TEREX

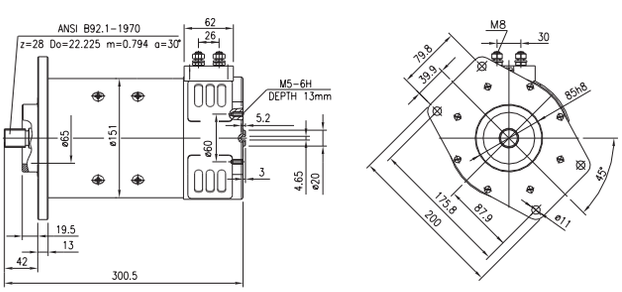

	TY	V	kW	RPM	OP	RO	IP	F	NOTES
IM0236	DC	48	4,0	1.800	S2=60 min S3=100%ED	⟷	IP12	Customer design	IG/T/VT

TEREX

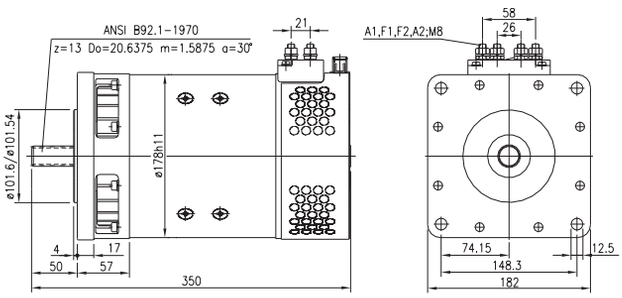

IM0237	DC	48	4,0	2.300	S2=60 min	⟷	IP22	Customer design	IG/T

TEREX

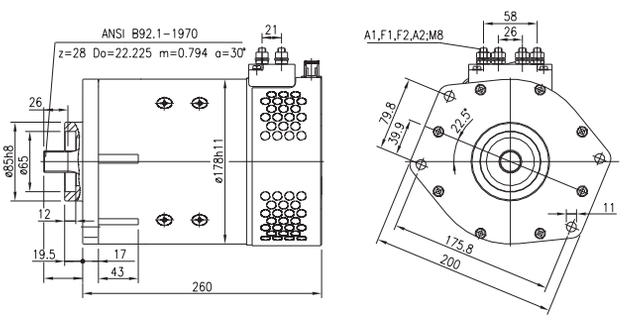

IM0238	DC	24	2,1	2.250	S2=2,5 min S3=6%ED	→	IP54	Customer design	IG/H/HD

OIL SISTEM

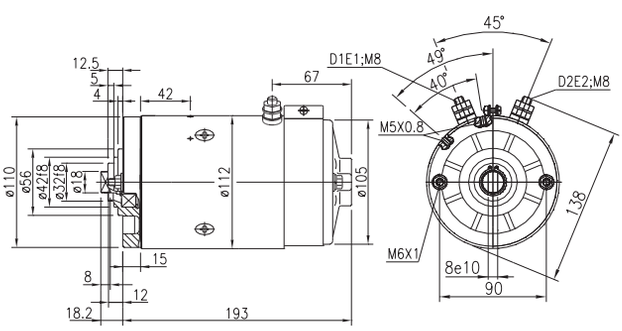

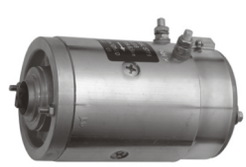

	TY	V	kW	RPM	OP	RO	IP	F	NOTES
IM0239	DC	24	1,5	2.800	S2=60 min	↔	IP12	Shaft-both end	IG/T/VT

TEKNO

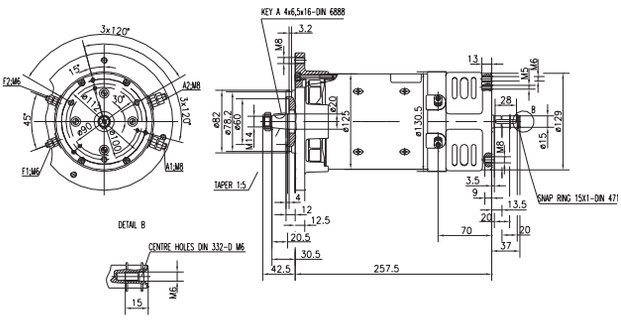

	TY	V	kW	RPM	OP	RO	IP	F	NOTES
IM0240	DC	24	1,5	2.800	S2=60 min	↔	IP12	Shaft-both end	IG/T/VT

TEKNO

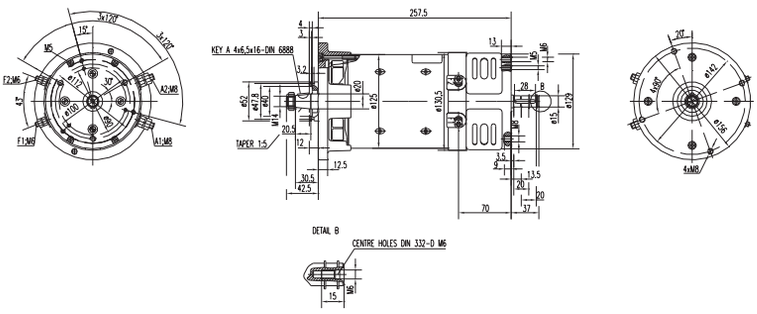

PICTURES NOT AVAILABLE

	TY	V	kW	RPM	OP	RO	IP	F	NOTES
IM0241	DC	24	3,0	3.300	S2=4 min S3=15%ED	→		Transport	TP/IG/H

HYDAC FLUIDTECHNIK

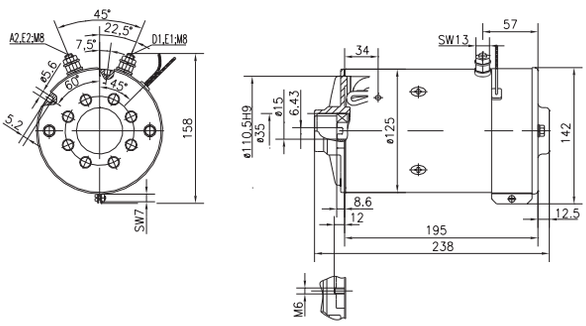

	TY	V	kW	RPM	OP	RO	IP	F	NOTES
IM0243	DC	24	0,5	2.800	S2=5 min S3=17%ED	↔	IP54	Standard	IG/H

OIL SISTEM

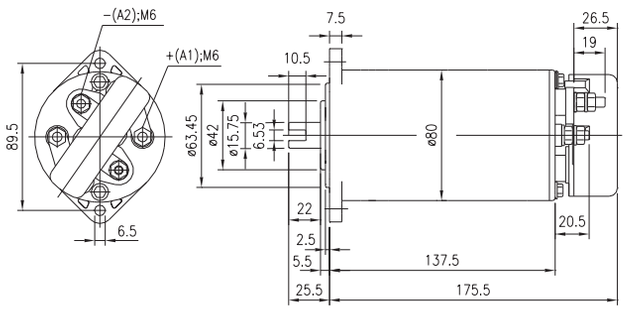

	TY	V	kW	RPM	OP	RO	IP	F	NOTES
IM0244	DC	24	2,1	2.750	S2=6 min S3=10%ED	→	IP54	Bosch Round	TP/IG/H /HD

OTTO NUSSBAUM

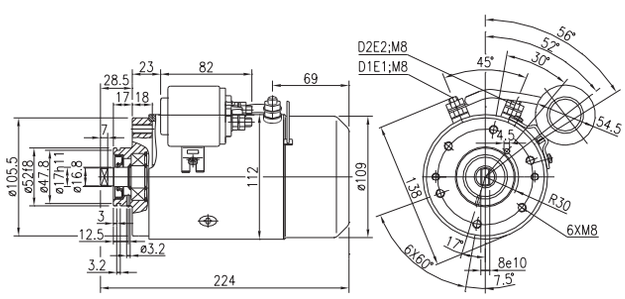

	TY	V	kW	RPM	OP	RO	IP	F	NOTES
IM0245	DC	12	1,6	2.500	S2=1,8 min S3=5%ED	→	IP54	Bosch 40 X 40	TP/IG/H

ANTEO

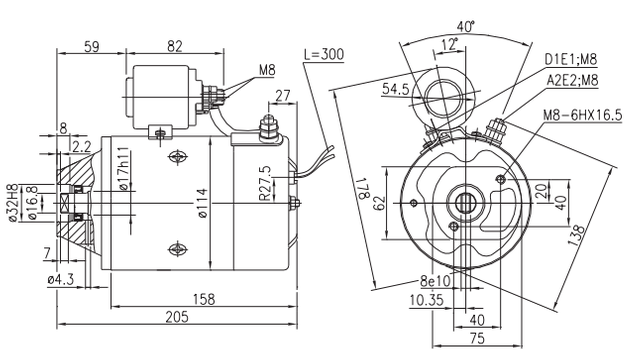

	TY	V	kW	RPM	OP	RO	IP	F	NOTES
IM0246	DC	24	2,2	2.500	S2=1,2 min S3=4%ED	→	IP54	Bosch 40 X 40	TP/IG/H

ANTEO

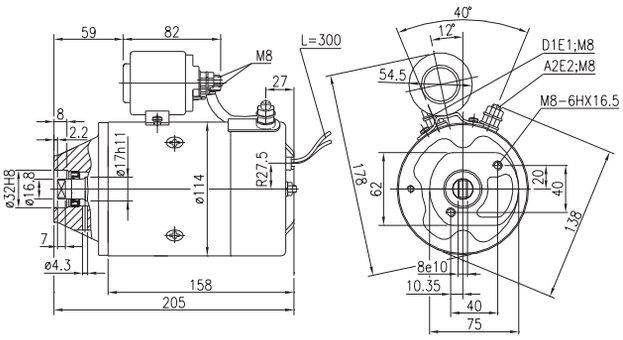

IM0247	DC	12	0,5	2.500	S2=5 min S3=17%ED	→	IP54	Standard	TP/IG/H

HYDROVEN

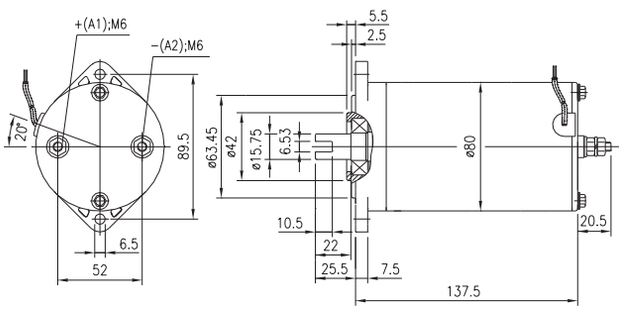

IM0248	DC	24	3,0	2.600	S2=4 min S3=8%ED	→		Transport	TP/IG/H

OIL SISTEM

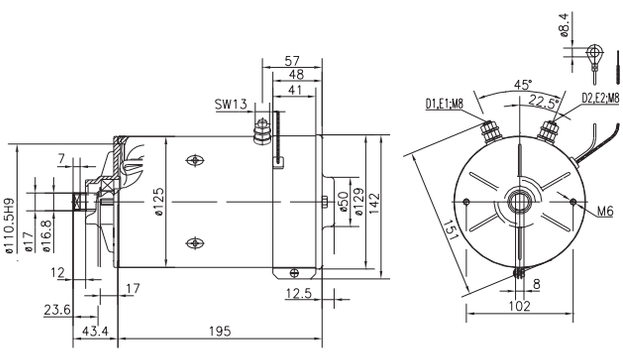

	TY	V	kW	RPM	OP	RO	IP	F	NOTES
IM0249	DC	24	0,5	3.200	S2=6 min S3=20%ED	→	IP54	Customer design	IG/H

SPX FLUID POWER (FENNER)

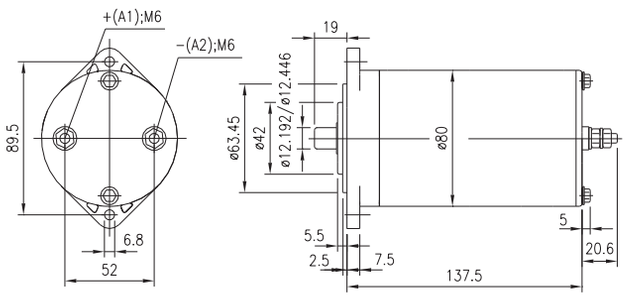

IM0250	DC	24	3,0	2.600	S2=4 min S3=8%ED	→		Transport	IG/H

BROC,OIL SISTEM

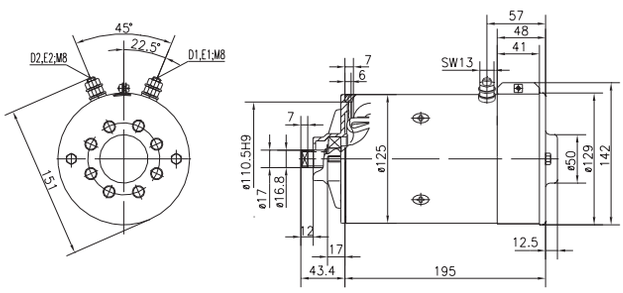

IM0251	DC	24	3,0	3.100	S2=13 min S3=28%ED	→	IP12	Customer design	TP/IG/H /VT/HD

SAVERY

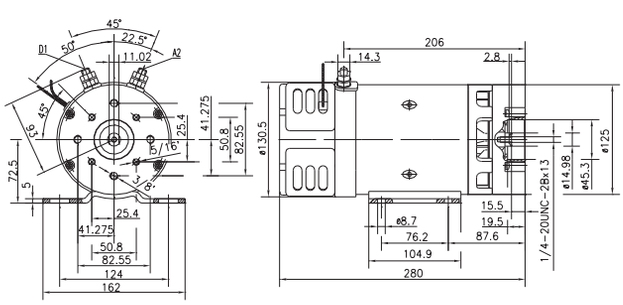

	TY	V	kW	RPM	OP	RO	IP	F	NOTES
IM0252	DC	24	2,1	2.750	S2=3,5 min S3=8%ED	←	IP54	Customer design	IG/O/HD

SIDES

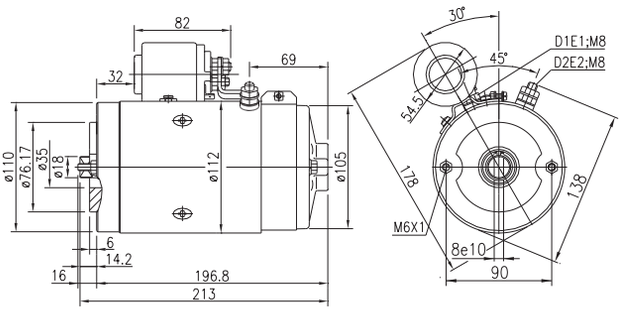

PICTURES NOT AVAILABLE

IM0253	DC	24	3,0	2.600	S2=6 min S3=16%ED	→	IP20	Bosch 60 X 60	TP/IG/H /VT

VIERECK

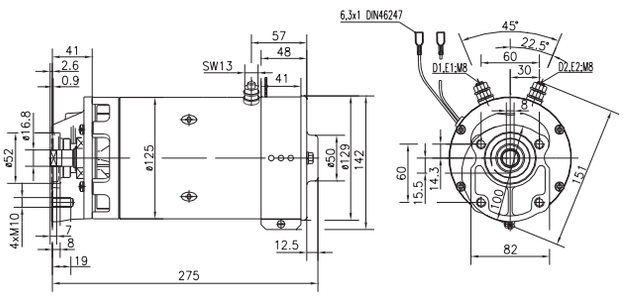

PICTURES NOT AVAILABLE

IM0254	DC	12	1,6	2.600	S2=2 min S3=10%ED	←	IP54	Transport	IG/H

SCATTOLINI,FAIST COMPONENTI

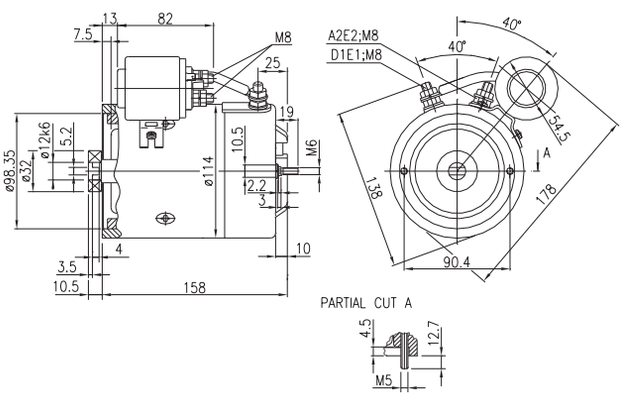

	TY	V	kW	RPM	OP	RO	IP	F	NOTES
IM0255	DC	12	1,5	2.200	S2=2 min S3=5%ED	→	IP54	Transport	IG/H

HYTOS

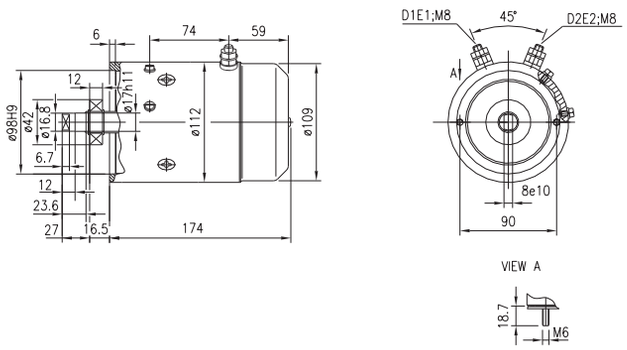

IM0256	DC	24	3,0	1.600	S2=28 min S3=50%ED	→	IP23	Bosch 60 X 60	IG/H/VT

FAYMONVILLE,HCT LUX

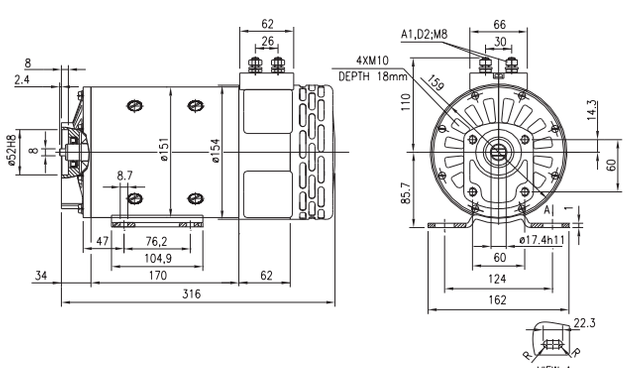

IM0257	DC	24	3,0	2.600		→		Transport	IG/H/HD

BUCHER HYDRAULICS (HIDROIRMA)

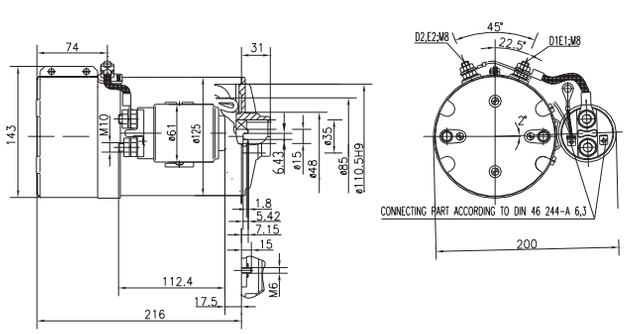

	TY	V	kW	RPM	OP	RO	IP	F	NOTES
IM0258	DC	24	2,0	2.200	S2=2 min S3=5%ED	→	IP54	Hidroirma	IG/H

BUCHER HYDRAULICS (HIDROIRMA)

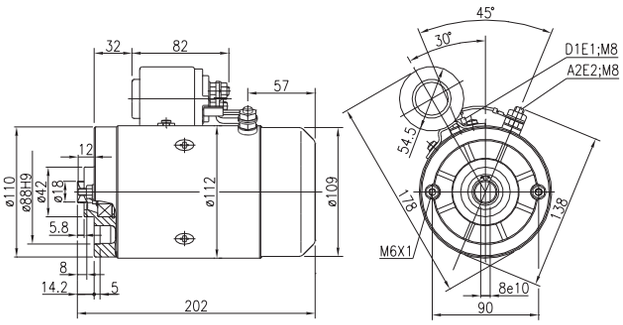

IM0259	DC	12	1,5	2.300	S2=1 min S3=5%ED	→	IP54	Hidroirma	IG/H

BUCHER HYDRAULICS (HIDROIRMA)

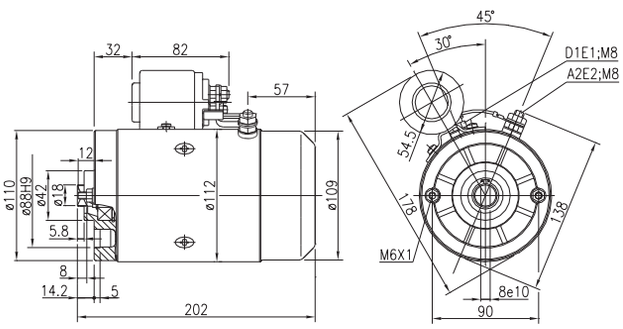

IM0260	DC	24	2,2	2.750	S2=2 min S3=5%ED	→	IP54	Transport	IG/H

BUCHER HYDRAULICS (HIDROIRMA)

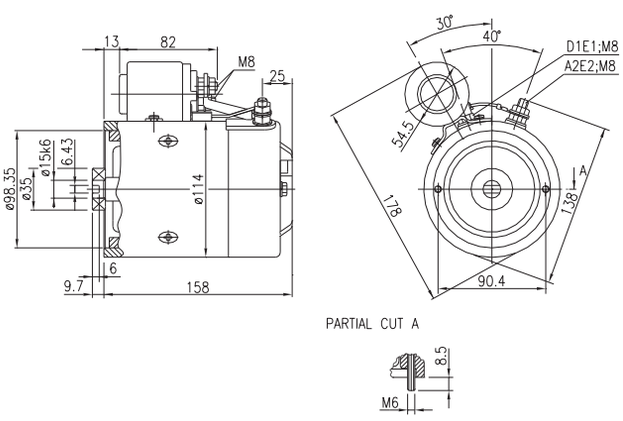

	TY	V	kW	RPM	OP	RO	IP	F	NOTES
IM0261	DC	12	1,6	2.750	S2=1 min S3=5%ED	→	IP54	Transport	IG/H

BUCHER HYDRAULICS (HIDROIRMA)

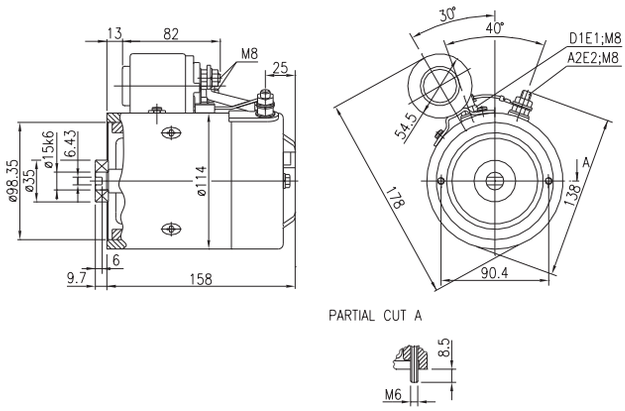

IM0263	DC	24	3,0	2.600	S2=6 min S3=11%ED	→		Transport	IG/H/HD

BUCHER HYDRAULICS (HIDROIRMA)

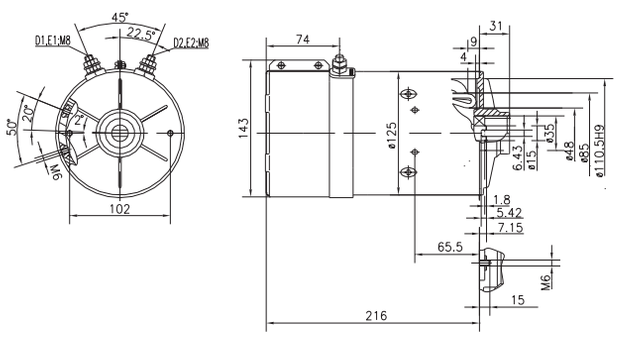

IM0264	DC	12	1,2	3.950	S2=1,6 min S3=7%ED	←	IP54	Transport	IG/H

OLEODINAMICA REGGIANA

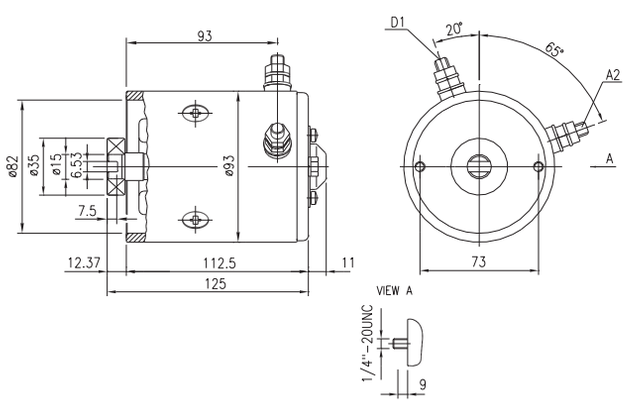

	TY	V	kW	RPM	OP	RO	IP	F	NOTES
IM0265	DC	80	3,0	1.800	S3=100%ED	→	IP24	Customer design	IG/O

SLOVENSKE ŽELEZNICE

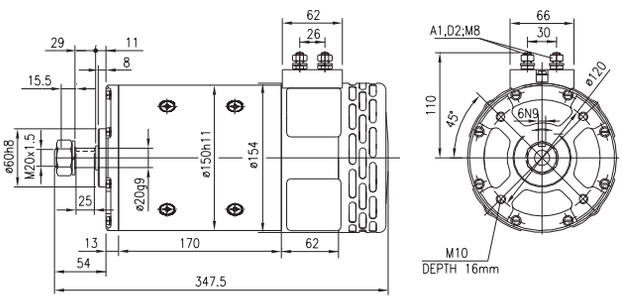

PICTURES NOT AVAILABLE

IM0266	DC	24	2,0	2.100	S2=25 min S3=35%ED	↔	IP21	Shaft-both end	IG/T

ICEM

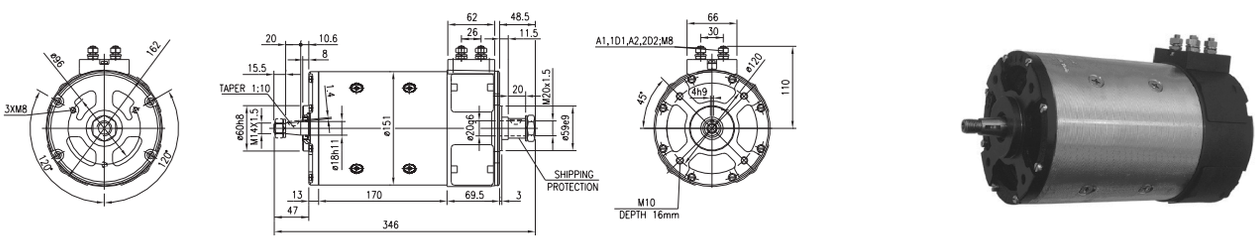

IM0267	DC	24	1,0	1.600	S2=60 min	↔	IP21	Shaft-both end	IG/T

ICEM

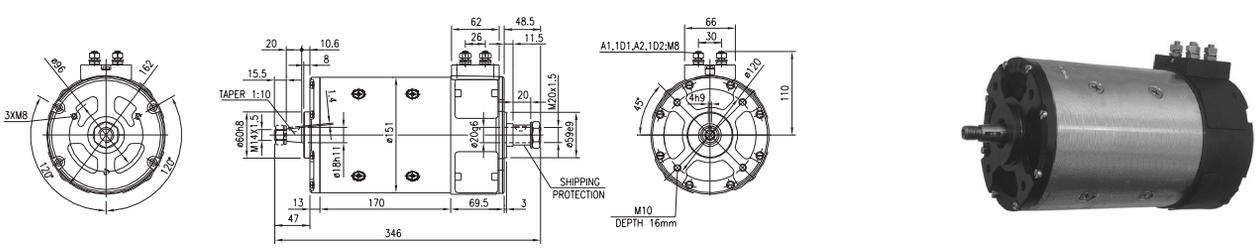

	TY	V	kW	RPM	OP	RO	IP	F	NOTES
IM0268	DC	24	0,5	2.800	S2=5 min S3=17%ED	↔	IP54	Standard	IG/H

HYDRO-TEK

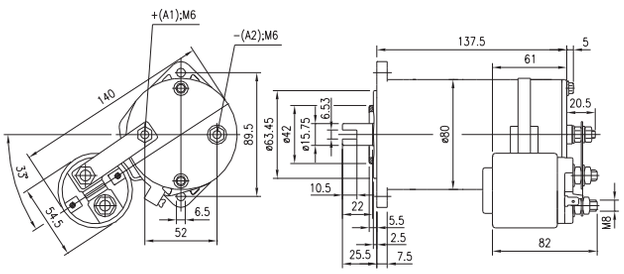

PICTURES NOT AVAILABLE

IM0269	DC	24	2,2	2.600	S2=2 min S3=5%ED	→	IP54	Customer design	TP/IG/H

ANTEO

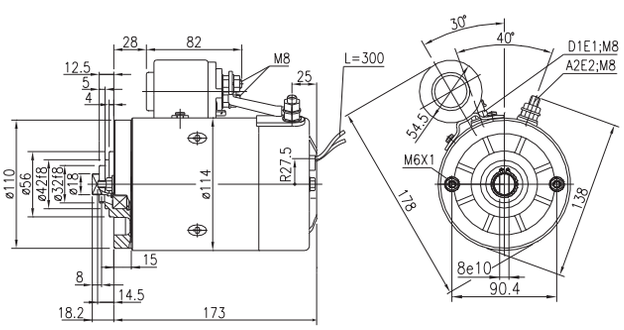

IM0270	DC	24	2,2	2.500	S2=1,2 min S3=4%ED	→	IP44	Transport	IG/H

BAR CARGOLIFT,MBB PALFINGER,HYDAC FLUIDTECHNIK,MONTEC

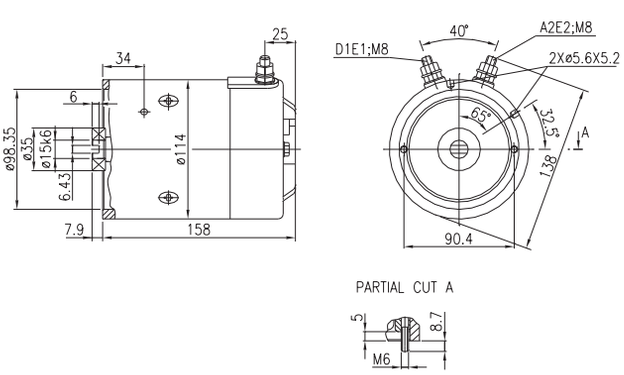

	TY	V	kW	RPM	OP	RO	IP	F	NOTES
IM0271	DC	24	0,9	3.000	S1	↔	IP12	Customer design	IG/T/VT

TEKNO

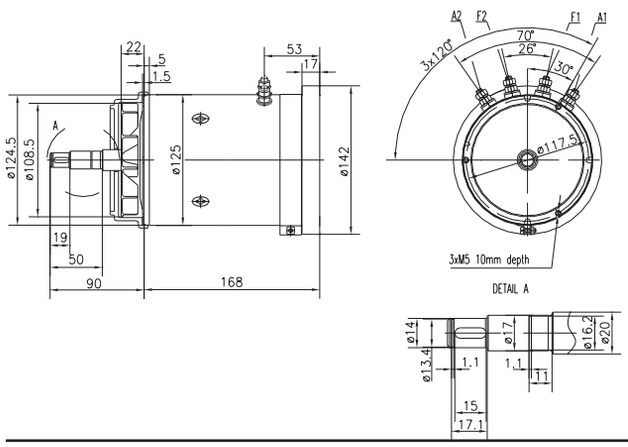

IM0272	DC	48	3,7	1.200	S2=18 min S3=30%ED	→	IP23	Bosch 60 X 60	IG/H/VT

CIMM

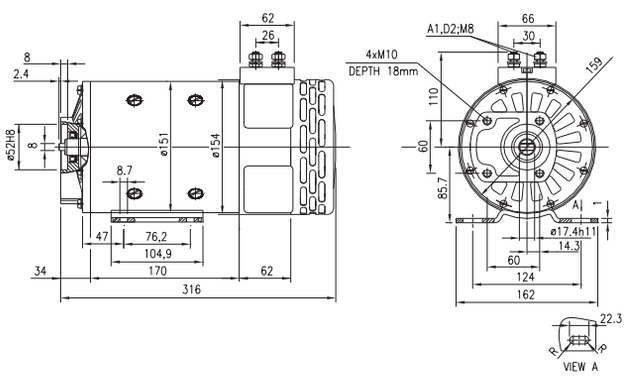

IM0273	DC	24	4,1	1.200	S2=7 min S3=10%ED	→	IP23	Bosch 60 X 60	IG/H/VT

CIMM

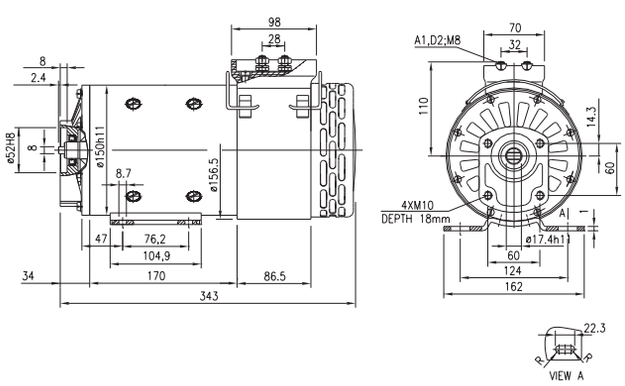

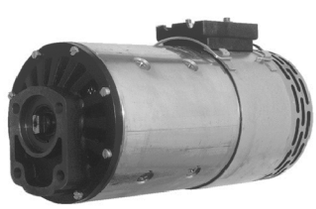

	TY	V	kW	RPM	OP	RO	IP	F	NOTES
IM0274	DC	12	0,4	4.000	S1	←	IP54	Customer design	IG/H

ETESIA

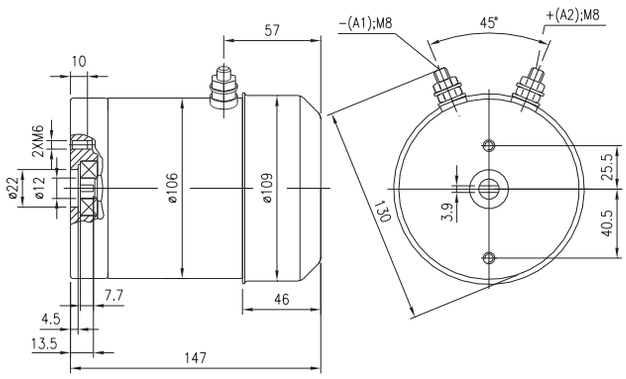

IM0275	DC	12	1,6	2.500	S2=3,5 min S3=12%ED	←	IP54	Transport	IG/H

FAIST COMPONENTI

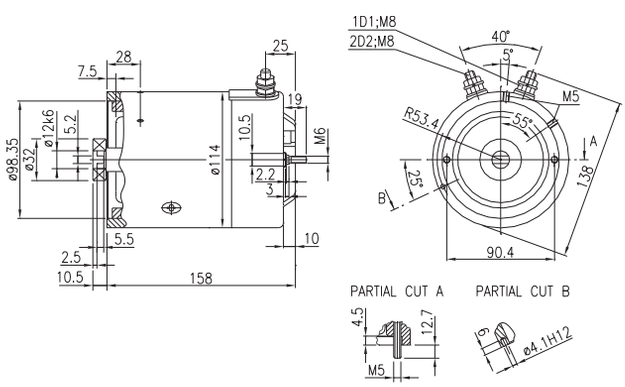

IM0277	DC	24	3,0	3.300	S2=4 min S3=8%ED	→	IP43	Bosch 40 X 40	IG/H

HYDAC TECHNOLOGY

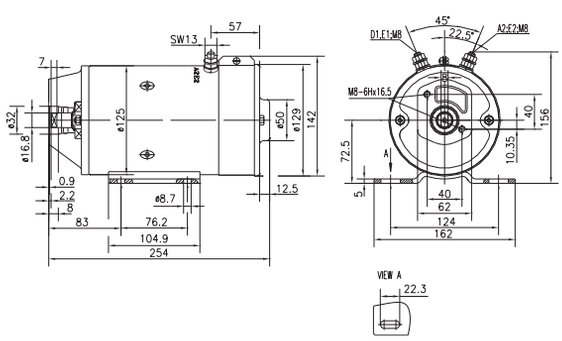

	TY	V	kW	RPM	OP	RO	IP	F	NOTES
IM0278	DC	24	3,0	3.100	S2=13 min S3=28%ED	→	IP12	Customer design	IG/H/VT /HD

HYDRAQUIP

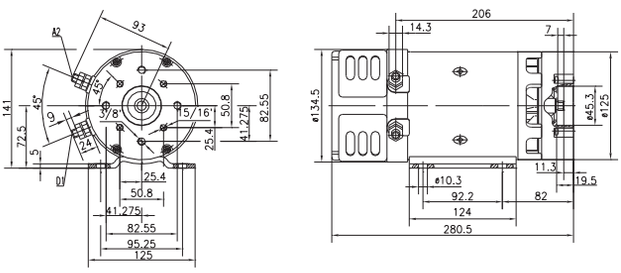

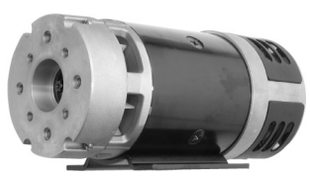

IM0279	DC	24	2,2	2.750	S2=2 min S3=5%ED	→	IP54	Transport	IG/H

OIL SISTEM

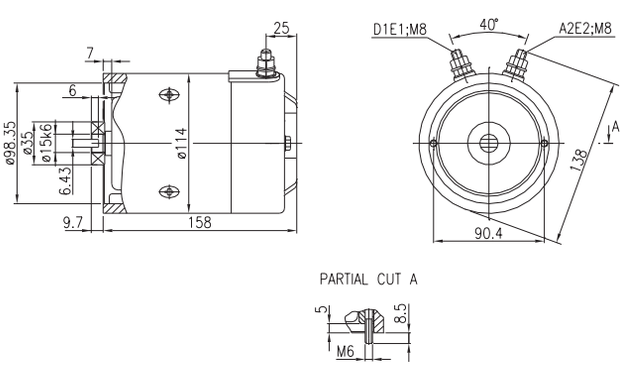

IM0280	DC	12	1,6	2.500	S2=1,8 min S3=5%ED	→	IP54	Bosch 40 X 40	TP/IG/H

ANTEO

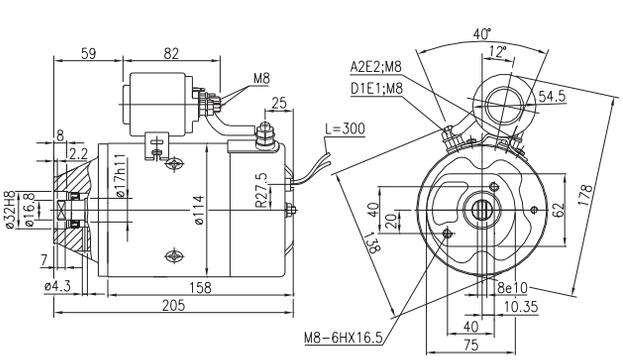

PICTURES NOT AVAILABLE

	TY	V	kW	RPM	OP	RO	IP	F	NOTES
IM0281	DC	24	1,0	3.000	S1	⟷	IP23	Shaft-both end	IG/T/VT

NACCO,COMER INDUSTRIES

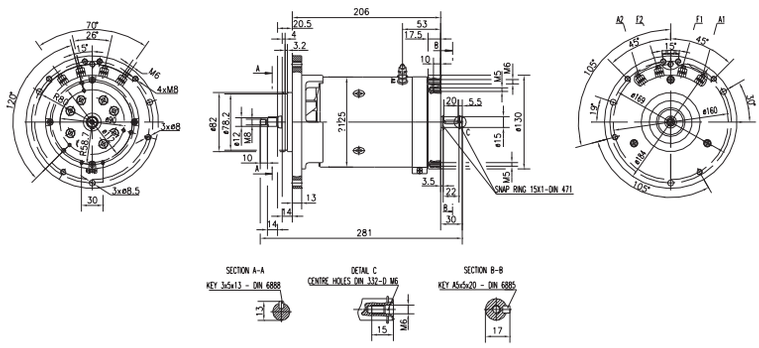

PICTURES NOT AVAILABLE

IM0282	DC	24	1,5	2.800	S2=60 min	⟷	IP12	Shaft-both end	IG/T/VT /HD

NACCO,COMER INDUSTRIES

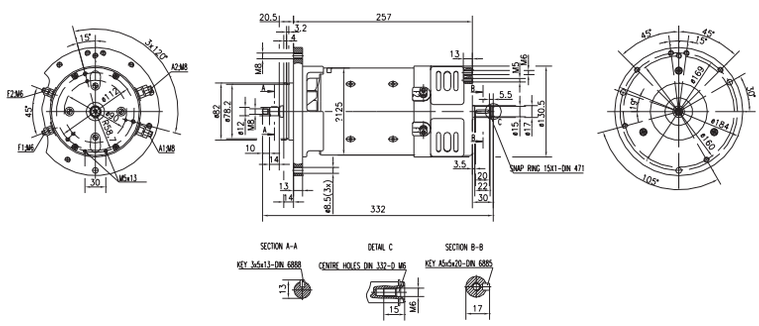

IM0283	DC	24	2,2	2.500	S2=1,2 min S3=4%ED	→	IP54	Bosch 40 X 40	TP/IG/H

ANTEO

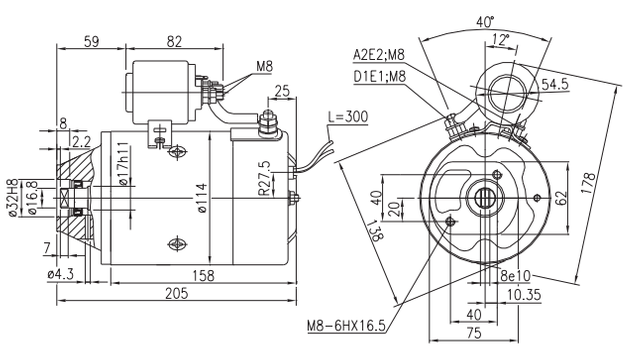

PICTURES NOT AVAILABLE

	TY	V	kW	RPM	OP	RO	IP	F	NOTES
IM0284	DC	24	3,0	3.100	S2=13 min S3=28%ED	→	IP12	Customer design	IG/H/VT /HD

SAVERY,HALDEX HYDRAULICS

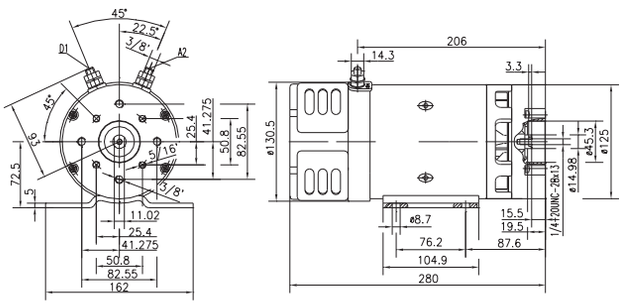

IM0285	DC	12	1,6	2.600	S2=2 min S3=10%ED	←	IP54	Transport	IG/H

HYDR-APP

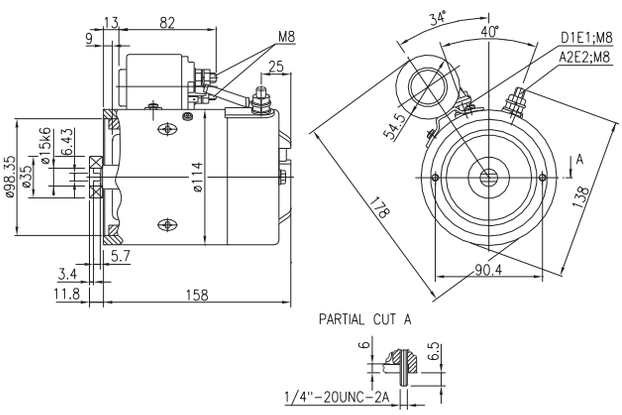

IM0286	DC	24	3,0	3.300	S2=4 min S3=15%ED	→	IP43	Bosch 60 X 60	IG/H

BOSCH,ROCLA

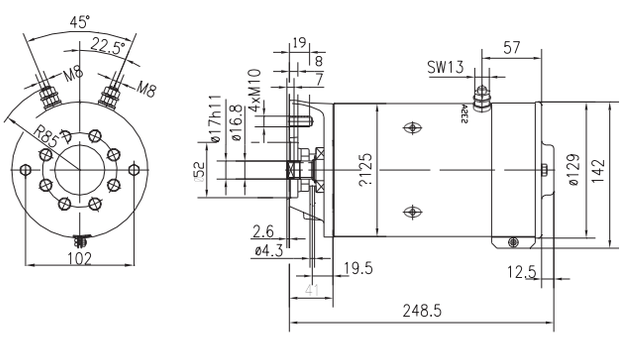

	TY	V	kW	RPM	OP	RO	IP	F	NOTES
IM0287	DC	12	1,5	2.250	S2=2 min S3=5%ED	⟷	IP54	Customer design	IG/O

HARKEN

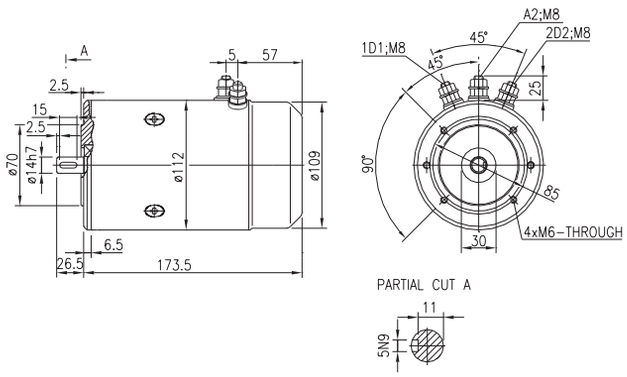

IM0288	DC	24	2,0	3.100	S2=1,5 min S3=4%ED	⟷	IP54	Customer design	IG/O

HARKEN

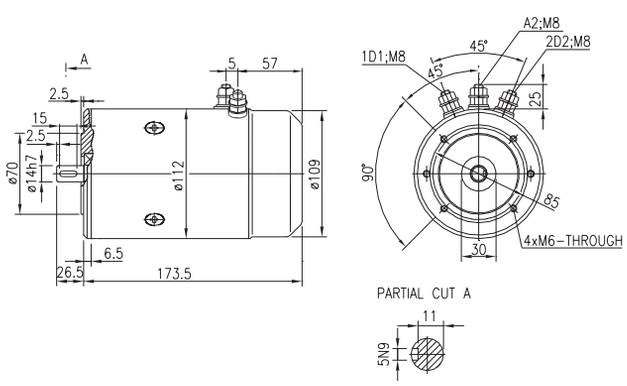

IM0289	DC	24	2,0	3.100	S2=1,5 min S3=4%ED	⟷	IP54	Customer design	IG/O

HARKEN

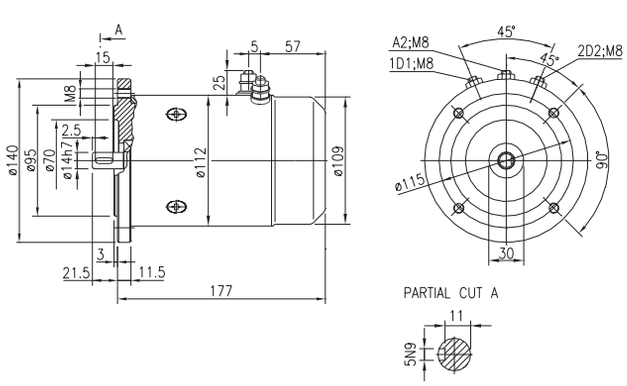

	TY	V	kW	RPM	OP	RO	IP	F	NOTES
IM0290	DC	12	1,5	2.250	S2=2 min S3=5%ED	↔	IP54	Customer design	IG

HARKEN

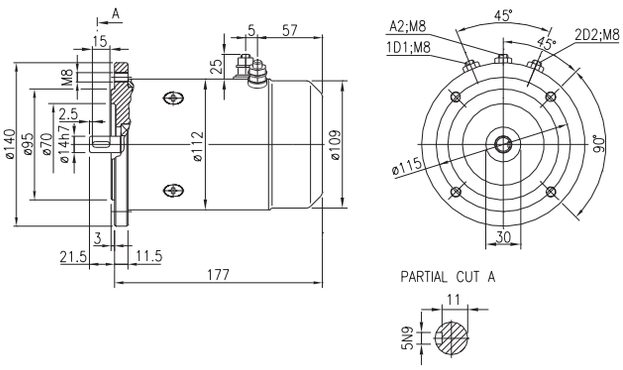

IM0291	DC	12	0,5	1.700	S1	↔	IP54	Customer design	IG/O

WESTERMANN

IM0292	DC	24	0,2	3.100	S1	←	IP65	Customer design	IG/H

ACTION HYDRO

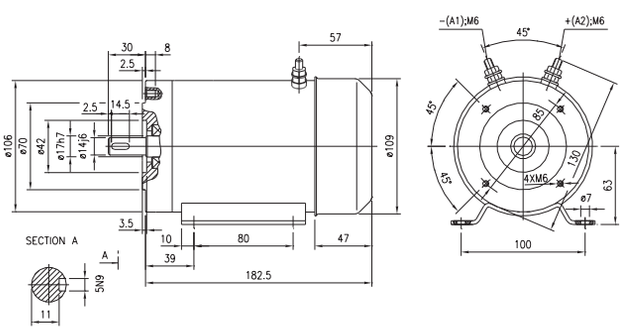

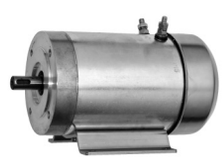

	TY	V	kW	RPM	OP	RO	IP	F	NOTES
IM0293	DC	24	0,2	1.500	S1	←	IP65	Customer design	IG/H

OIL SISTEM,ACTION HYDRO

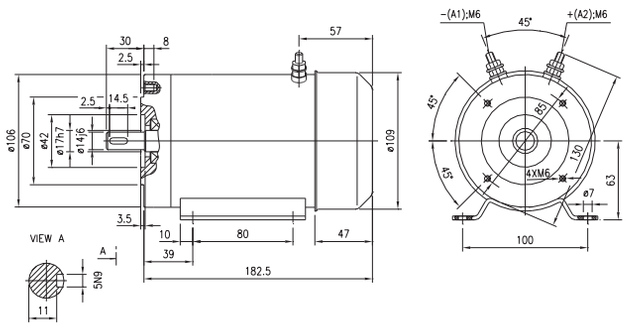

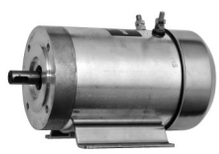

IM0295	DC	24	2,0	2.350	S2=2 min S3=6%ED	→	IP54	Transport	IG/H

OIL SISTEM

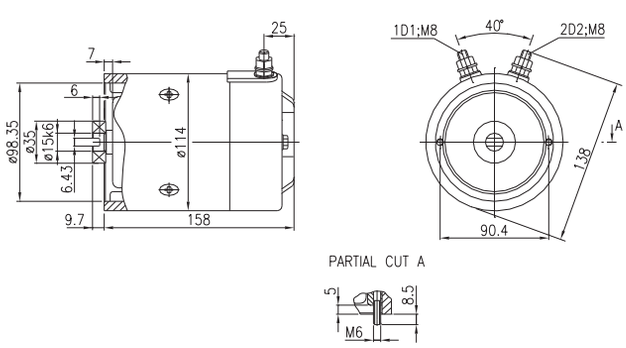

IM0296	DC	12	0,8	4.000	S2=4 min S3=9%ED	←	IP54	Standard	IG/H

MICRO METAL WORKS

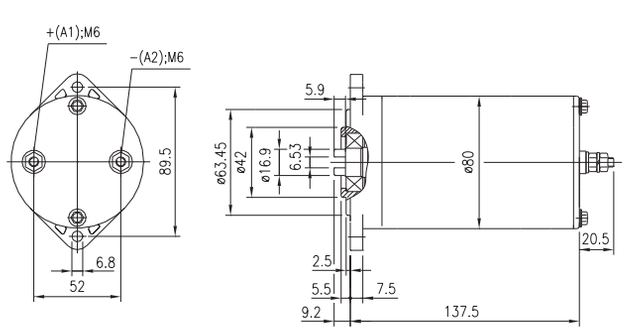

	TY	V	kW	RPM	OP	RO	IP	F	NOTES
IM0297	DC	24	0,8	4.500	S2=4 min S3=10%ED	→	IP54	Customer design	TP/IG/H

SAMES

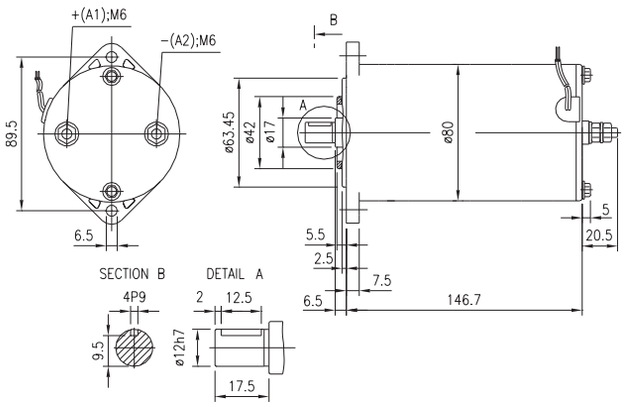

IM0298	DC	24	1,4	4.400	S2=5,9 min S3=12%ED	→	IP54	Transport	IG/H

BROC,OIL SISTEM

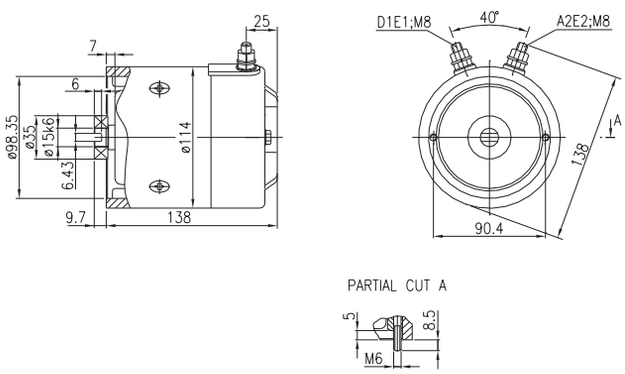

IM0299	DC	12	1,5	2.250	S2=2 min S3=5%ED	↔	IP54	Transport	TP/IG/H

AKTIESELSKABET

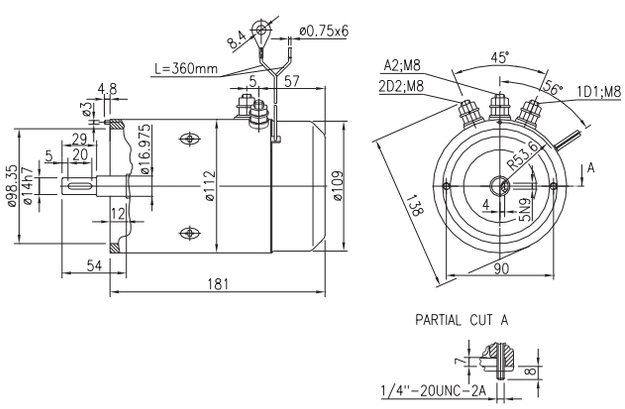

	TY	V	kW	RPM	OP	RO	IP	F	NOTES
IM0300	DC	24	2,0	2.800	S2=1,5 min S3=4%ED	↔	IP54	Transport	TP/IG/H

AKTIESELSKABET

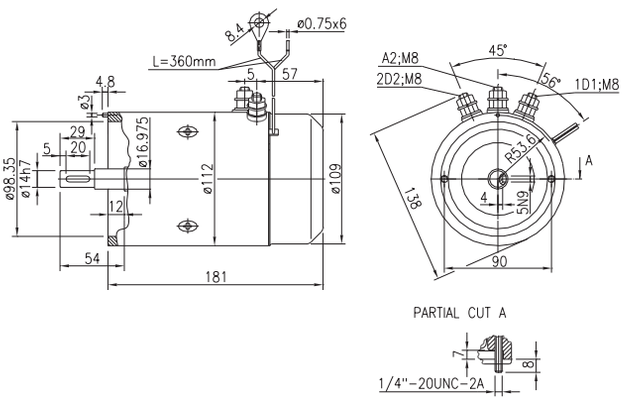

IM0301	DC	48	4,5	1.800	S2=60 min S3=100%ED	↔	IP12	Customer design	IG/T/VT

CIMM

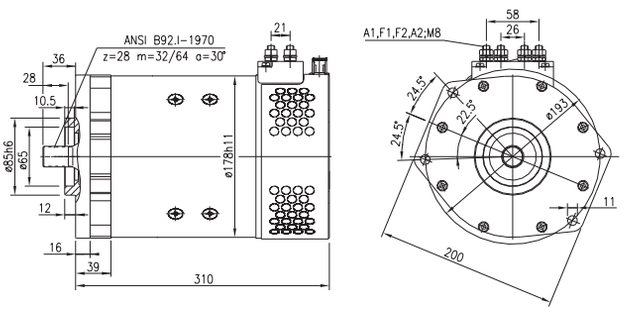

IM0303	DC	24	5,5	2.000		→	IP54	Customer design	TP/IG/H

HYDRO LEDUC

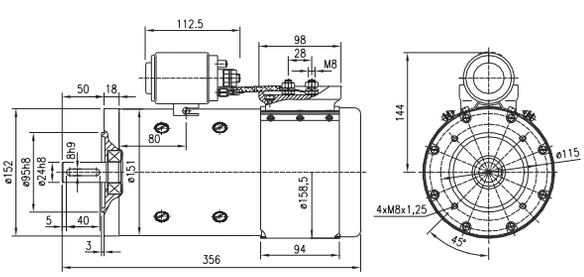

	TY	V	kW	RPM	OP	RO	IP	F	NOTES
IM0304	DC	12	1,6	2.500	S2=3,5 min S3=12%ED	←	IP54	Transport	IG/H

HALDEX HYDRAULICS

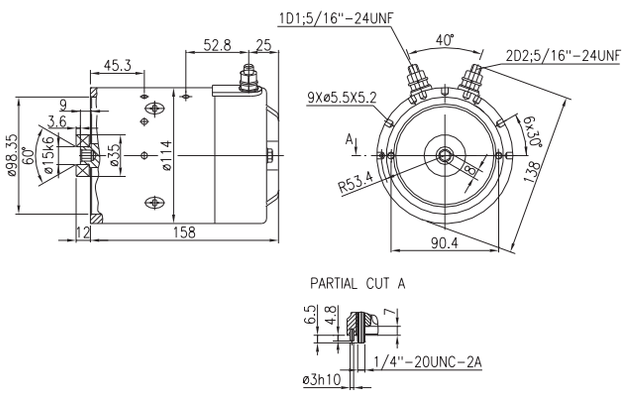

PICTURES NOT AVAILABLE

IM0305	DC	12	1,6	2.750	S2=2 min S3=5%ED	←	IP66	Transport	G/H

HALDEX HYDRAULICS

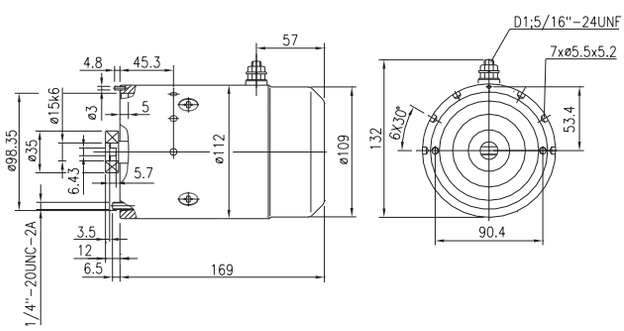

PICTURES NOT AVAILABLE

IM0306	DC	12	1,6	2.750	S2=4 min S3=10%ED	↔	IP54	Transport	G/H

HALDEX HYDRAULICS

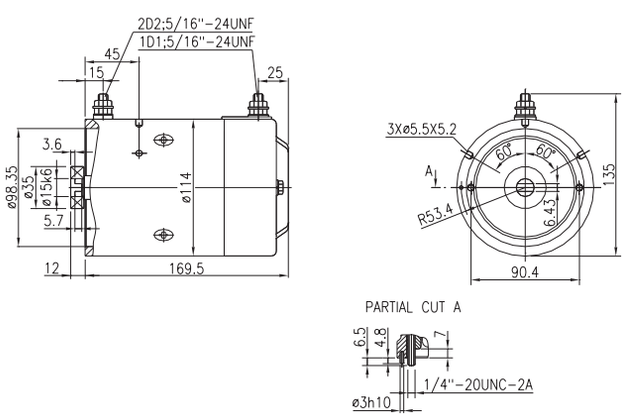

	TY	V	kW	RPM	OP	RO	IP	F	NOTES
IM0307	DC	12	0,7	1.500	S2=2,5 min S3=7%ED	↔	IP54	Customer design	IG/O

HARKEN

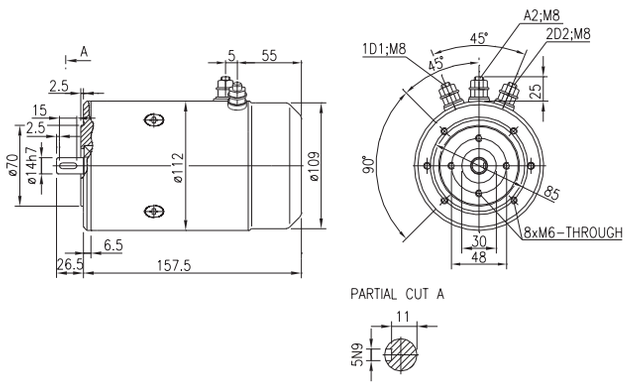

IM0308	DC	24	0,9	1.800	S2=2 min S3=6%ED	↔	IP54	Customer design	IG/O

HARKEN

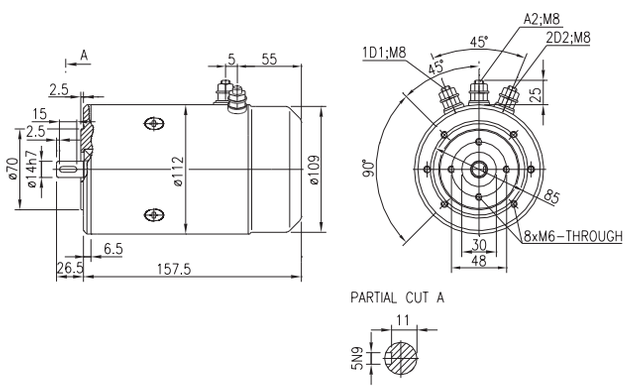

IM0309	DC	24	3,0	3.100	S2=13 min S3=28%ED	←	IP12	Customer design	IG/H/VT /HD

HALDEX HYDRAULICS

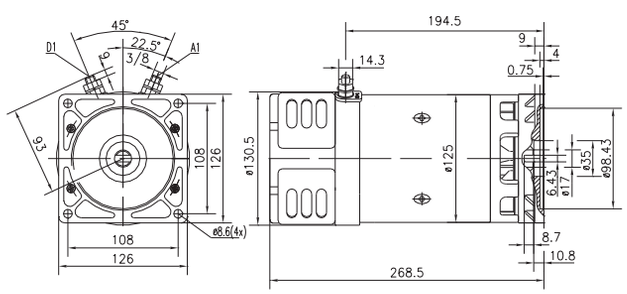

PICTURES NOT AVAILABLE

	TY	V	kW	RPM	OP	RO	IP	F	NOTES
IM0310	DC	24	3,0	3.100	S2=13 min S3=28%ED	→	IP12	Customer design	IG/H/VT /HD

HALDEX HYDRAULICS

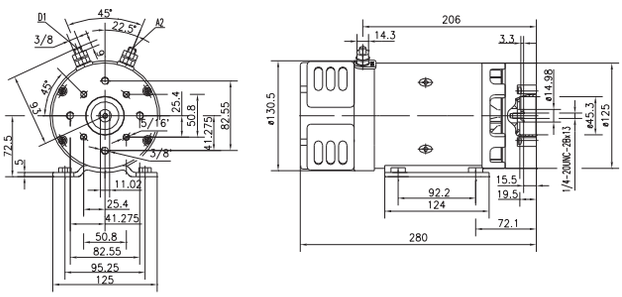

IM0311	DC	24	0,8	3.650	S2=1,8 min S3=8,5%ED	←	IP65	Standard	IG/H

HALDEX HYDRAULICS

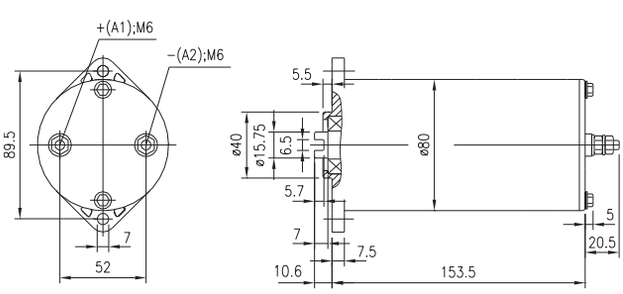

IM0312	DC	48	2,2	3.000	S2=2 min S3=7%ED	←	IP54	Transport	IG/H

HALDEX HYDRAULICS

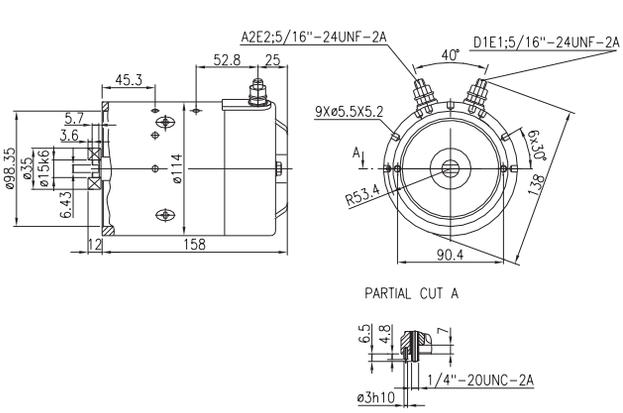

	TY	V	kW	RPM	OP	RO	IP	F	NOTES
IM0313	DC	12	1,6	1.500	S2=2,5 min S3=8%ED	←	IP54	Customer design	G/H

MONARCH

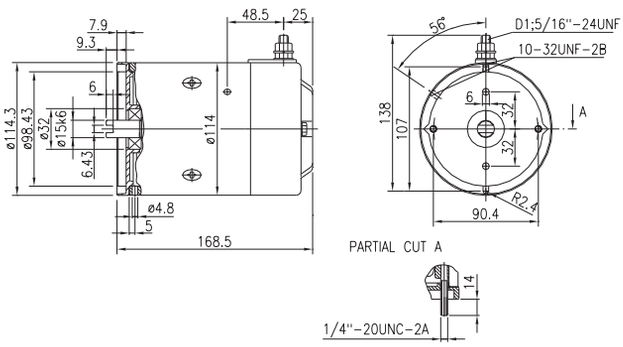

PICTURES NOT AVAILABLE

IM0314	DC	12	0,8	4.000	S2=5 min S3=17%ED	→	IP54	Standard	G/H

MONARCH

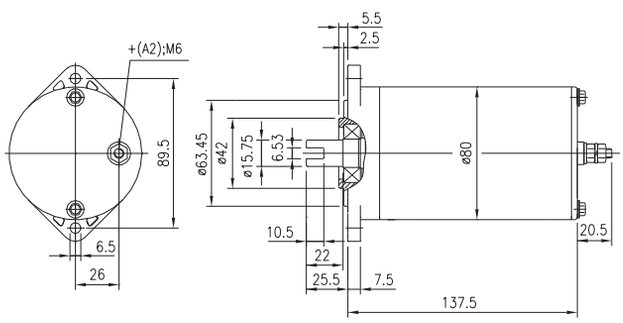

IM0315	DC	24	0,8	4.500	S2=4 min S3=10%ED	←	IP54	Customer design	IG/H

MONARCH,FLUID PACK

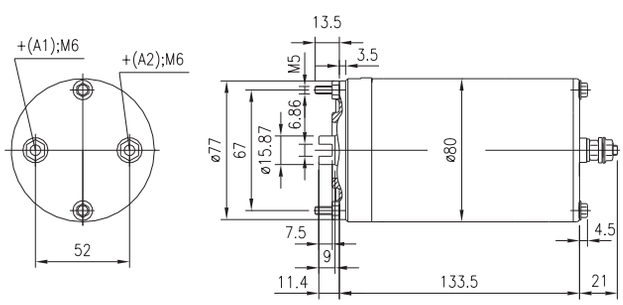

	TY	V	kW	RPM	OP	RO	IP	F	NOTES
IM0316	DC	12	1,6	1.500	S2=2,5 min S3=8%ED	←	IP54	Transport	TP/G/H

MONARCH

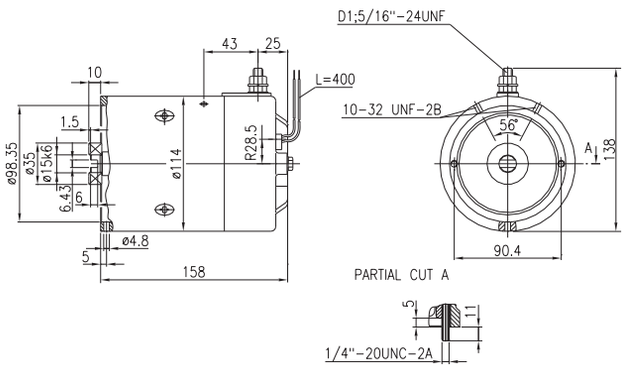

PICTURES NOT AVAILABLE

IM0317	DC	24	0,8	3.650	S2=1,8 min S3=8,5%ED	←	IP54	Customer design	TP/IG/H

MONARCH,FLUID PACK

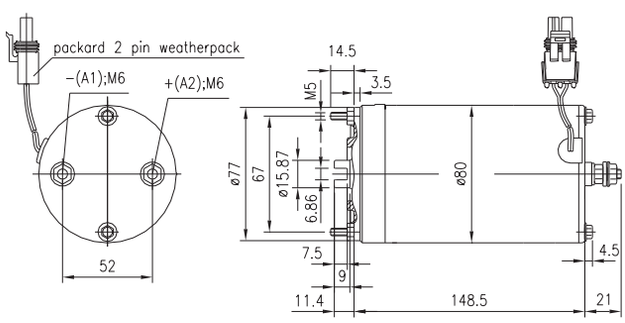

PICTURES NOT AVAILABLE

IM0318	DC	12	0,8	4.000	S2=4 min S3=9%ED	←	IP54	Customer design	TP/G/H

MONARCH

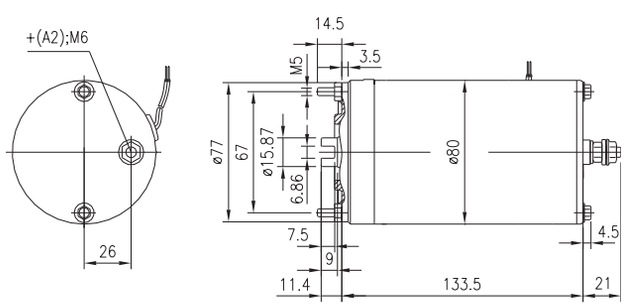

	TY	V	kW	RPM	OP	RO	IP	F	NOTES
IM0319	DC	48	2,2	3.000	S2=2 min S3=7%ED	←	IP54	Transport	IG/H

MONARCH

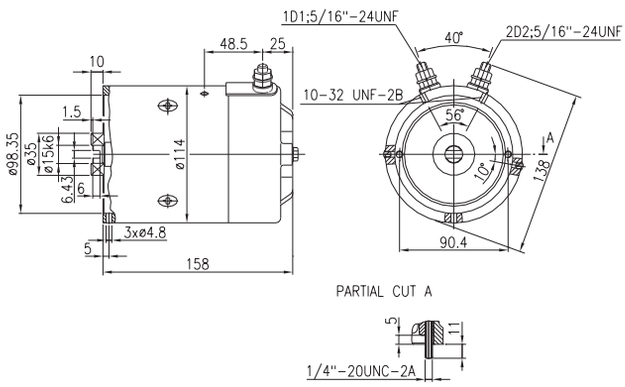

	TY	V	kW	RPM	OP	RO	IP	F	NOTES
IM0320	DC	12	1,6	1.500	S2=2,5 min S3=8%ED	←	IP54	Transport	IG/H

MONARCH

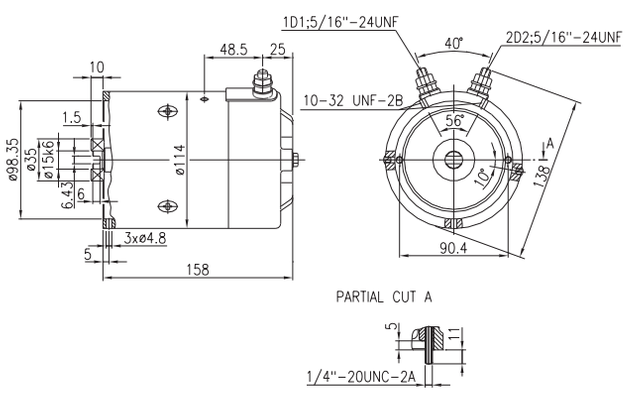

	TY	V	kW	RPM	OP	RO	IP	F	NOTES
IM0321	DC	24	2,2	2.750	S2=1,2 min S3=4%ED	←	IP54	Transport	TP/IG/H

MONARCH

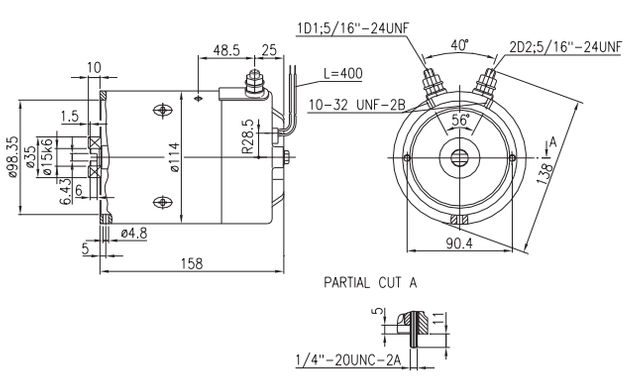

	TY	V	kW	RPM	OP	RO	IP	F	NOTES
IM0322	DC	24	3,0	2.600	S2=12 min S3=21%ED	→	IP12	Bosch 60 X 60	IG/H/VT /HD

MARIOTTI

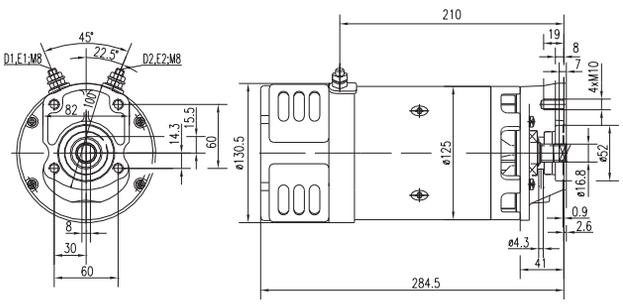

IM0323	DC	12	0,5	2.500	S2=5 min S3=17%ED	↔	IP54	Standard	IG/H

OIL SISTEM

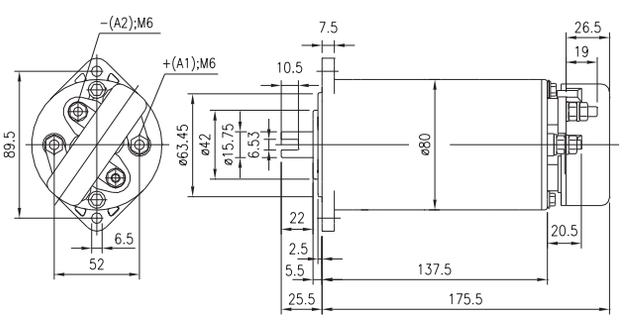

IM0324	DC	24	5,5	2.000	S3=10%ED	→	IP23	Bosch 60 X 60	IG/H/VT

RELATED FLUID POWER

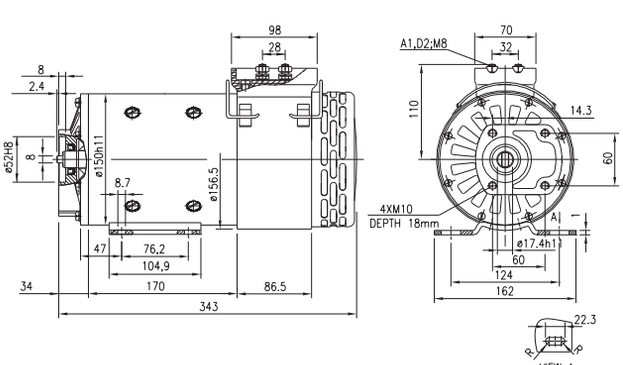

	TY	V	kW	RPM	OP	RO	IP	F	NOTES
IM0325	DC	24	0,8	4.000	S2=2,5 min S3=8%ED	↔	IP65	Standard	IG/H

FLUITRONICS (BERENDSEN)

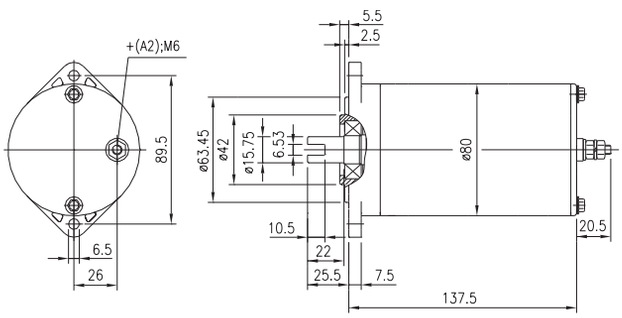

	TY	V	kW	RPM	OP	RO	IP	F	NOTES
IM0326	DC	12	1,2	2.900	S2=1,3 min S3=4,5%ED	→	IP54	Transport	IG/H

ECO SISTEMAS

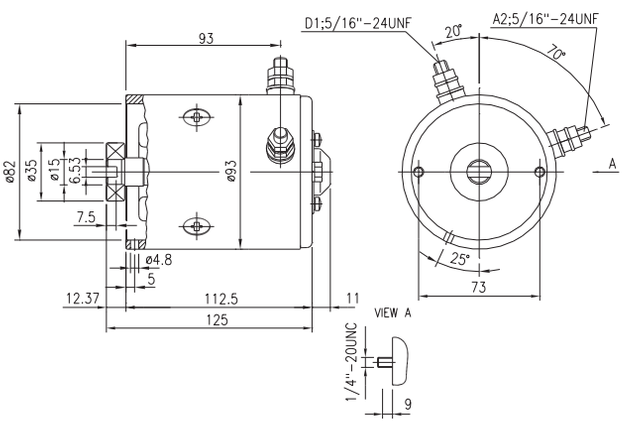

	TY	V	kW	RPM	OP	RO	IP	F	NOTES
IM0327	DC	24	1,2	2.950	S2=0,9 min S3=5,7%ED	→	IP54	Transport	IG/H

ECO SISTEMAS

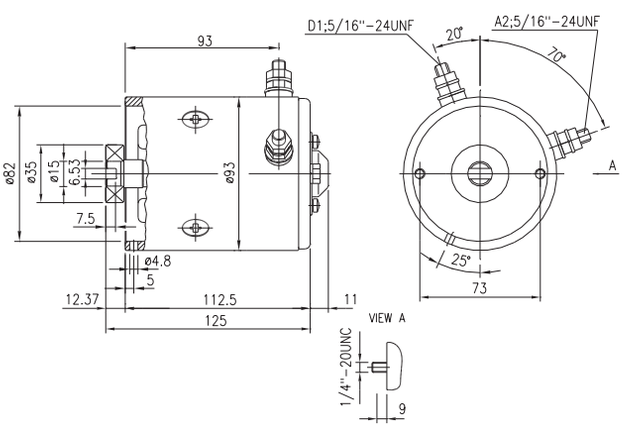

	TY	V	kW	RPM	OP	RO	IP	F	NOTES
IM0328	DC	48	2,0	2.500	S2=2,2 min S3=6%ED	←	IP54	Customer design	IG/H

HPI

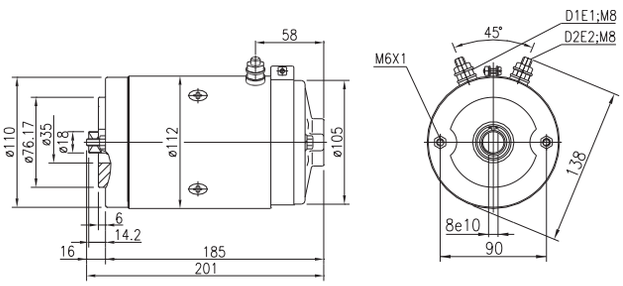

	TY	V	kW	RPM	OP	RO	IP	F	NOTES
IM0329	DC	24	2,1	2.300	S2=4 min S3=10%ED	←	IP54	Transport	TP/IG/H /HD

RELATED FLUID POWER

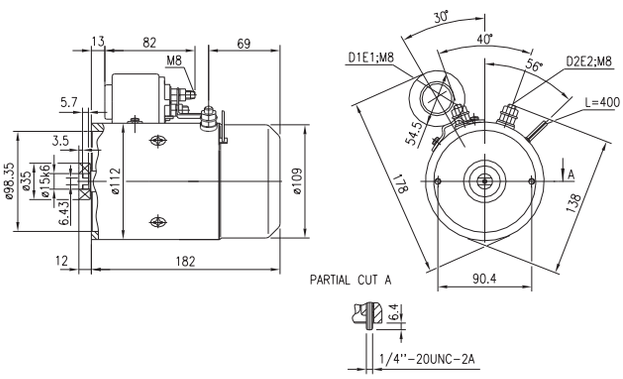

	TY	V	kW	RPM	OP	RO	IP	F	NOTES
IM0330	DC	12	1,6	2.500	S2=3,5 min S3=12%ED	←	IP54	Transport	IG/H

RELATED FLUID POWER

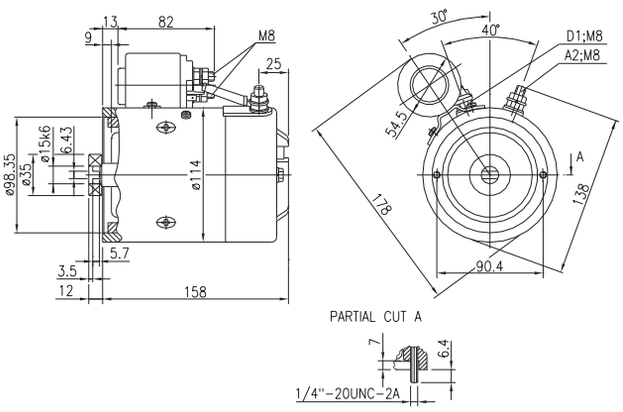

	TY	V	kW	RPM	OP	RO	IP	F	NOTES
IM0331	DC	48	2,0	2.500	S2=3 min S3=12%ED	←		Transport	IG/H

HYDR-APP

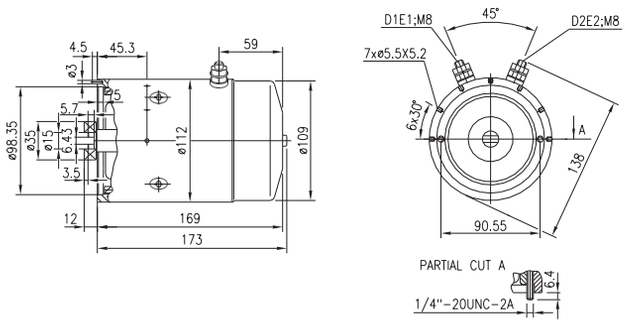

	TY	V	kW	RPM	OP	RO	IP	F	NOTES
IM0332	DC	48	1,0	1.500	S2=60 min	↔		Customer design	IG/O

TEREX

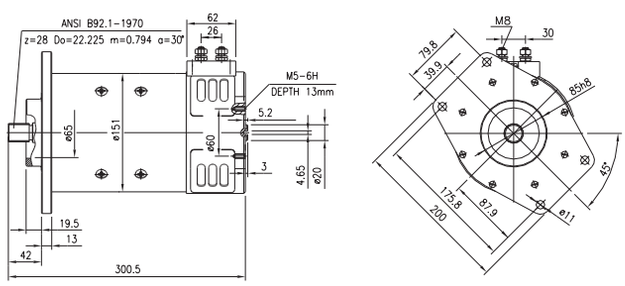

PICTURES NOT AVAILABLE

	TY	V	kW	RPM	OP	RO	IP	F	NOTES
IM0333	DC	48	4,5	1.800	S2=60 min S3=100%ED	↔	IP12	Customer design	IG/T/VT

TEREX

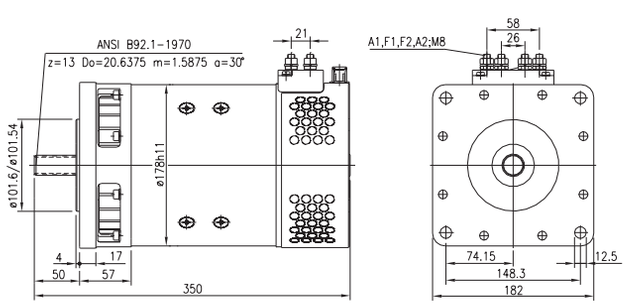

	TY	V	kW	RPM	OP	RO	IP	F	NOTES
IM0334	DC	24	3,0	2.600	S2=4 min S3=8%ED	→	IP66	Bosch 60 X 60	IG/H

BOSCH,FLUITRONICS (BERENDSEN)

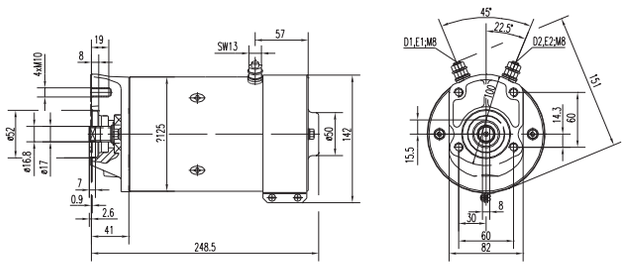

IM0335	DC	24	2,2	4.200	S2=5 min S3=10%ED	→	IP54	Customer design	IG/H

BROC

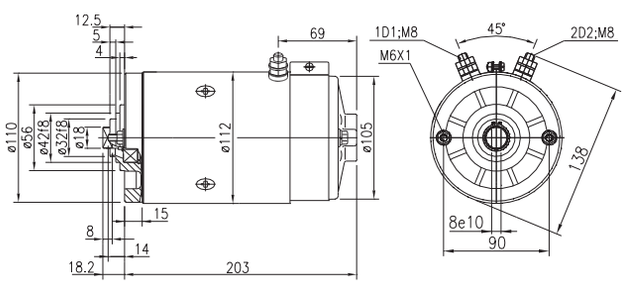

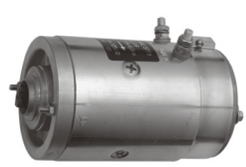

IM0336	DC	24	1,5	2.400		↔	IP44	Customer design	TP/G/O

ARCHERFIELD PRECISION ENGINEERING

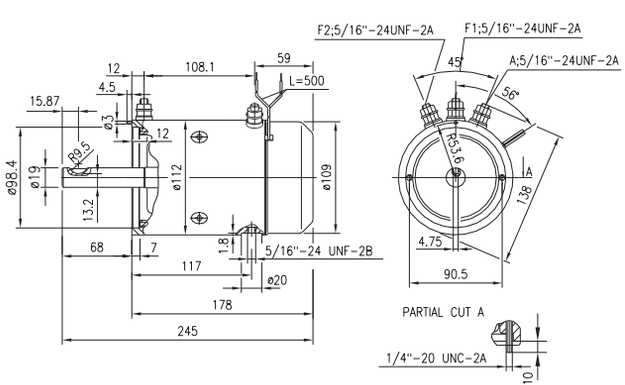

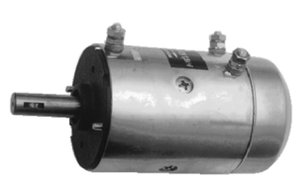

	TY	V	kW	RPM	OP	RO	IP	F	NOTES
IM0337	DC	12	0,8	3.500	S2=4 min S3=9%ED	↔	IP65	Customer design	IG/O

QUICK

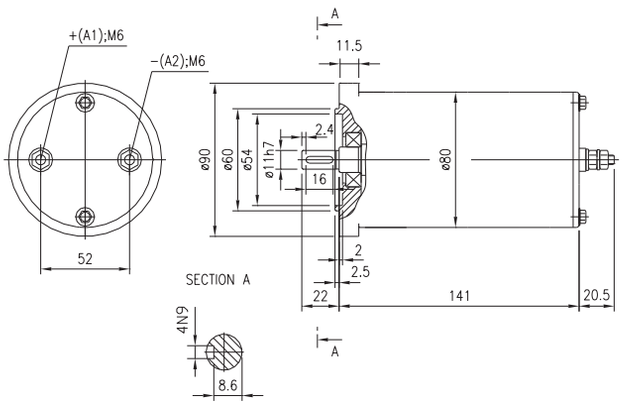

IM0338	DC	12	1,6	2.800		↔	IP44	Customer design	TP/G/O

ARCHERFIELD PRECISION ENGINEERING

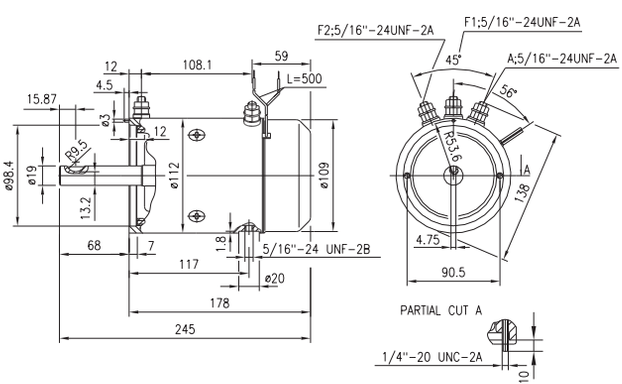

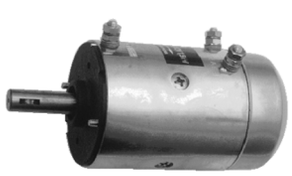

IM0341	DC	24	2,2	2.750	S2=2 min S3=5%ED	→	IP54	Transport	TP/IG/H

BROC

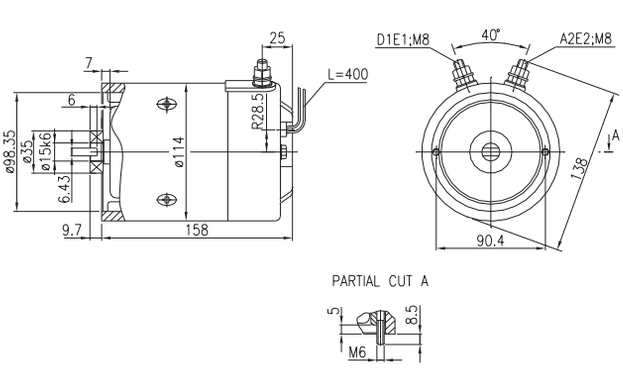

	TY	V	kW	RPM	OP	RO	IP	F	NOTES
IM0342	DC	24	0,9	3.000	S1	↔	IP23	Shaft-both end	IG/T/VT

TEKNO

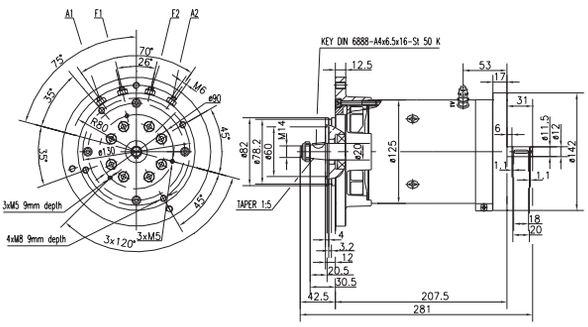

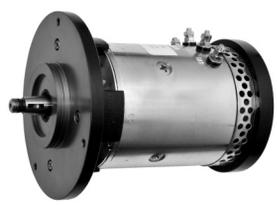

IM0350	DC	24	2,2	2.750	S2=2 min S3=5%ED	→	IP54	Transport	TP/IG/H

FLUITRONICS (BERENDSEN)

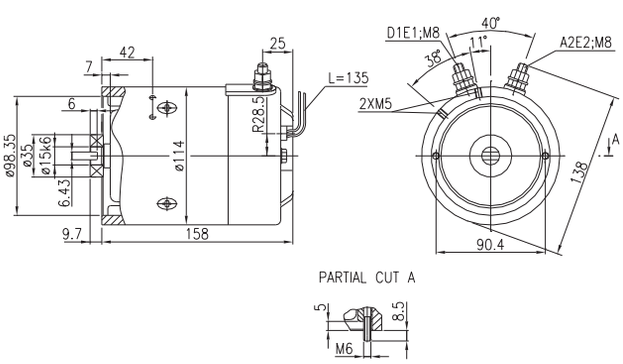

IM0352	DC	12	1,6	2.500	S2=1,8 min S3=5%ED	→	IP44	Transport	TP/IG/H

HYDAC FLUIDTECHNIK

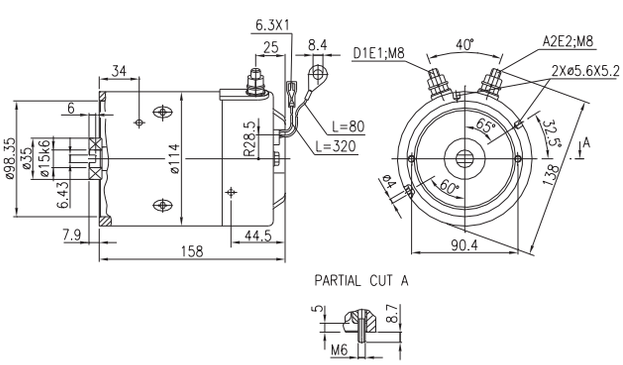

	TY	V	kW	RPM	OP	RO	IP	F	NOTES
IM0353	DC	24	2,2	2.600	S2=2 min S3=5%ED	→	IP54	Transport	TP/IG/H

SAVERY

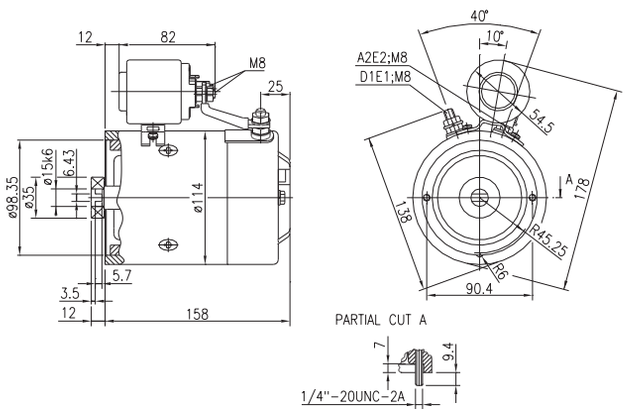

PICTURES NOT AVAILABLE

IM0355	DC	24	3,0	3.100	S2=6 min S3=11%ED	→	IP43	Transport	IG/H/HD

BROC

PICTURES NOT AVAILABLE

IM0356	DC	24	1,5	4.200		↔	IP12	Shaft-both end	IG/T/VT

COMER INDUSTRIES

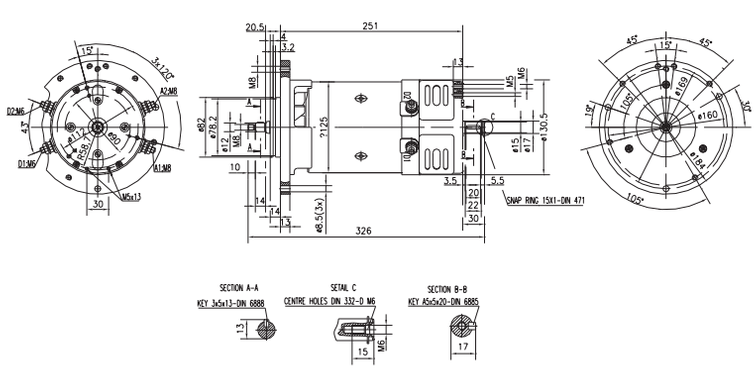

PICTURES NOT AVAILABLE

	TY	V	kW	RPM	OP	RO	IP	F	NOTES
IM0357	DC	24	3,0	2.600	S2=4 min S3=8%ED	→		Transport	IG/H

HYDAC FLUIDTECHNIK

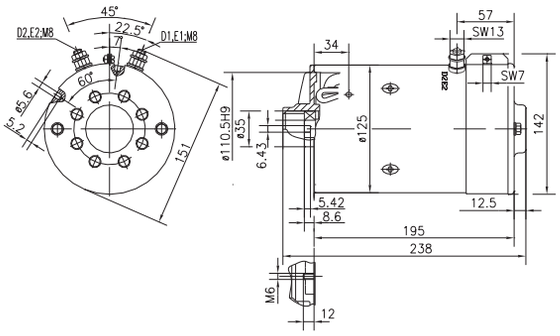

PICTURES NOT AVAILABLE

IM0358	DC	24	3,0	2.600	S2=13 min S3=20%ED	→	IP12	Transport	IG/H

HYDAC FLUIDTECHNIK

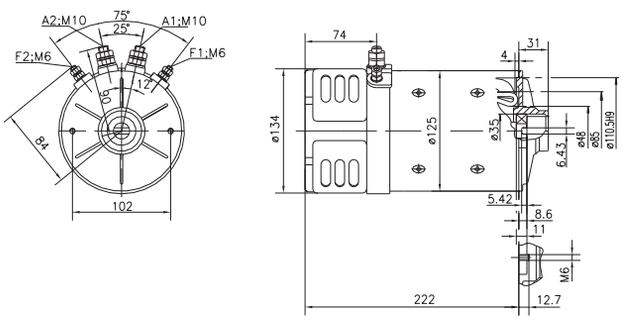

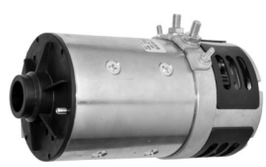

IM0359	DC	24	2,2	4.200	S2=5 min S3=10%ED	→	IP54	Transport	IG/H

HYDAC FLUIDTECHNIK

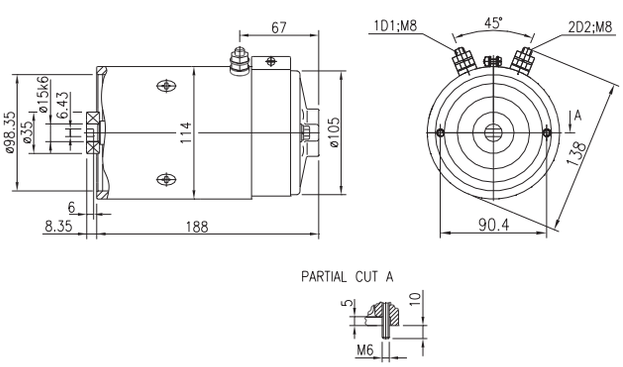

PICTURES NOT AVAILABLE

	TY	V	kW	RPM	OP	RO	IP	F	NOTES
IM0360	DC	48	3,7	1.200	S2=18 min S3=30%ED	→	IP23	Bosch 60 X 60	TP/IG/H /VT

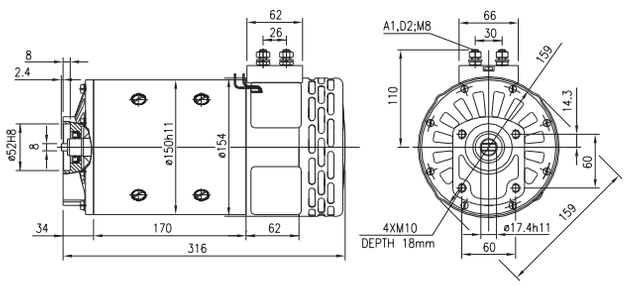

PICTURES NOT AVAILABLE

IM0361	DC	24	2,2	2.500	S2=1,2 min S3=4%ED	→	IP44	Transport	TP/IG/H

MONTEC

IM0362	DC	12	0,8	3.500	S2=4 min S3=9%ED	↔	IP54	Standard	IG/H

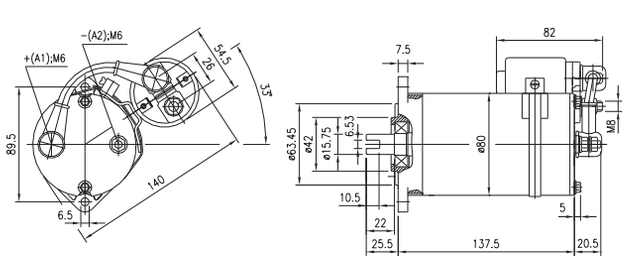

PICTURES NOT AVAILABLE

	TY	V	kW	RPM	OP	RO	IP	F	NOTES
IM0363	DC	24	0,8	4.000	S2=2,5 min S3=8%ED	↔	IP54	Standard	IG/H

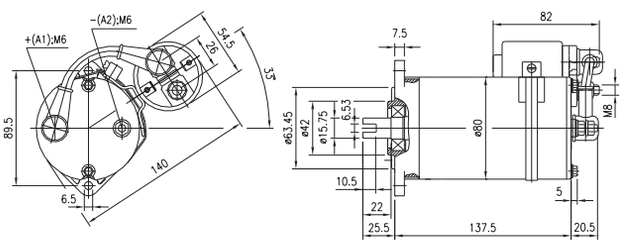

PICTURES NOT AVAILABLE

IM0364	DC	24	2,2	2.300	S2=2,5 min S3=7%ED	→	IP54	Customer design	IG/O

FAIVELEY TRANSPORT GROUP

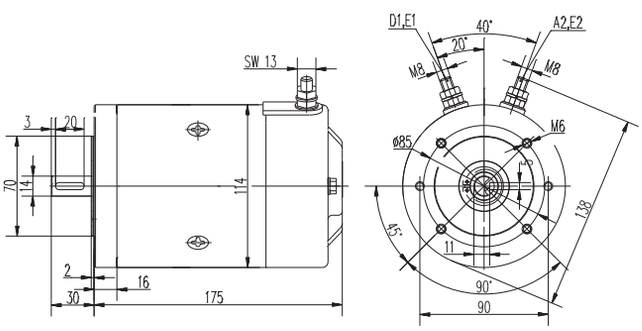

PICTURES NOT AVAILABLE

IM0365	DC	24	3,0	2.600	S2=6 min S3=11%ED	→	IP23	Transport	TP/IG/H

HYDAC FLUIDTECHNIK

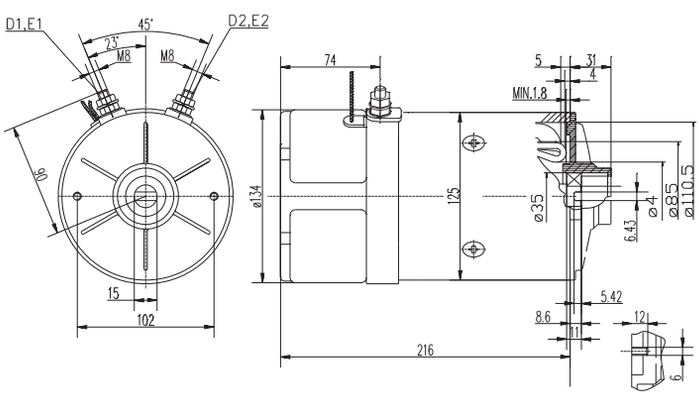

PICTURES NOT AVAILABLE

	TY	V	kW	RPM	OP	RO	IP	F	NOTES
IM0366	DC	12	2,4	2.600	S2=3 min S3=9%ED	→	IP20	Bosch 60 X 60	IG/H/VT

BEZARES

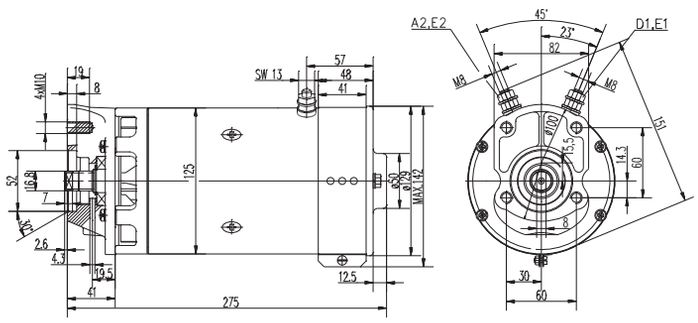

IM0367	DC	24	2,1	2.050	S2=60 min	↔		Shaft-both end	IG/T

KION

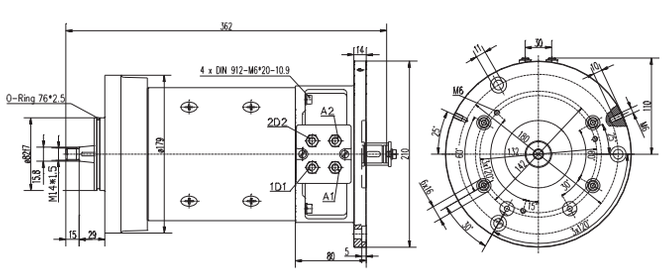

PICTURES NOT AVAILABLE

IM0368	DC	24	2,2	2.750	S2=1,2 min S3=4%ED	←	IP54	Transport	IG/H

MONARCH,BUCHER HYDRAULICS

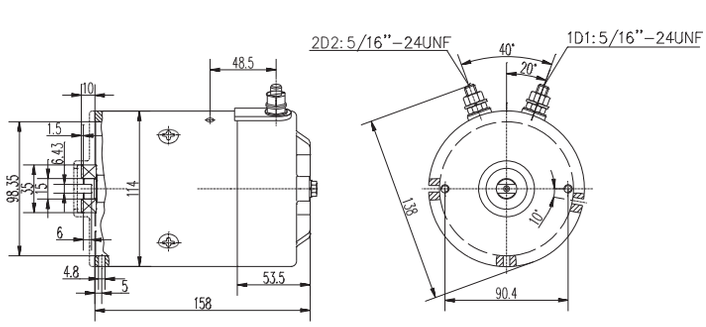

	TY	V	kW	RPM	OP	RO	IP	F	NOTES
IM0369	DC	24	8,8	1.650	S2=4 min S3=15%ED	←	IP12	Customer design	TP/IG/H /VT

MCF

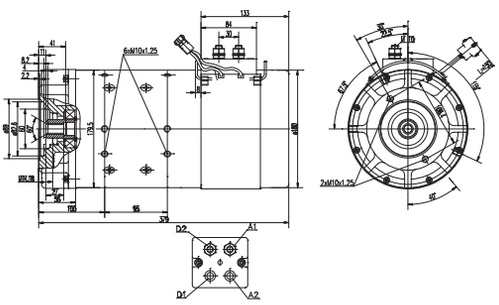

PICTURES NOT AVAILABLE

IM0372	DC	24	2,2	2.600	S2=1,2 min S3=4,5%ED	→	IP54	Customer design	IG/H

KOKUSAI KOGYO

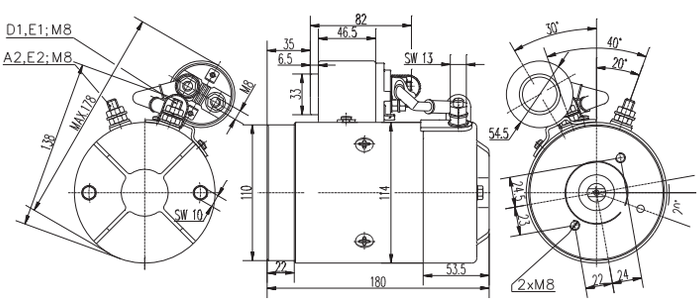

PICTURES NOT AVAILABLE

IM0373	DC	24	0,9	2.950	S2=0,9 min S3=5,7%ED	→	IP56	Customer design	G/H

TOYOOKI

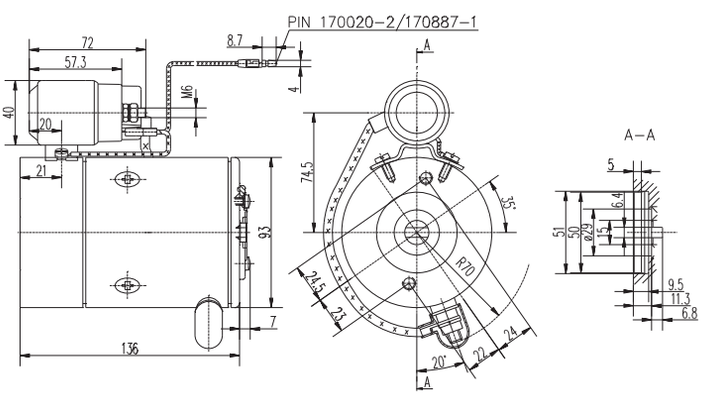

PICTURES NOT AVAILABLE

	TY	V	kW	RPM	OP	RO	IP	F	NOTES
IM0374	DC	12	0,9	2.700	S2=2,5 min S3=7,5%ED	→	IP55	Customer design	G/H

TOYOOKI

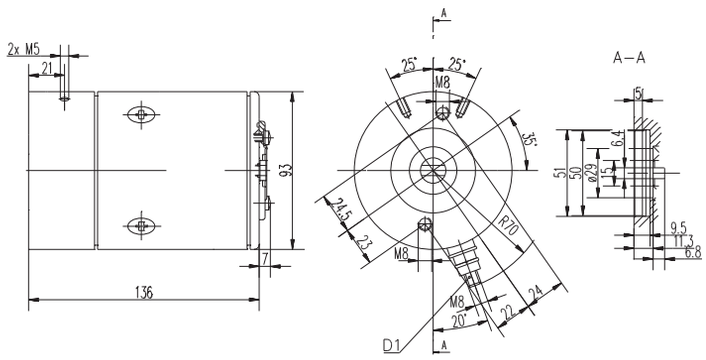

PICTURES NOT AVAILABLE

IM0375	DC	12	0,8	3.100	S2=2 min S3=8%ED	↔	IP54	Customer design	IG/H

BUCHER HYDRAULICS

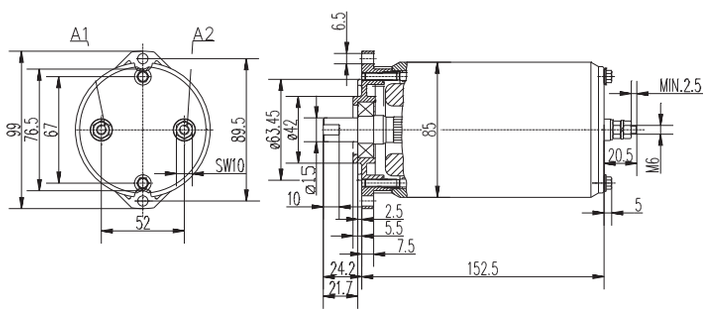

PICTURES NOT AVAILABLE

IM0376	DC	24	0,8	3.300	S2=2 min S3=7%ED	↔	IP54	Customer design	IG/H

BUCHER HYDRAULICS

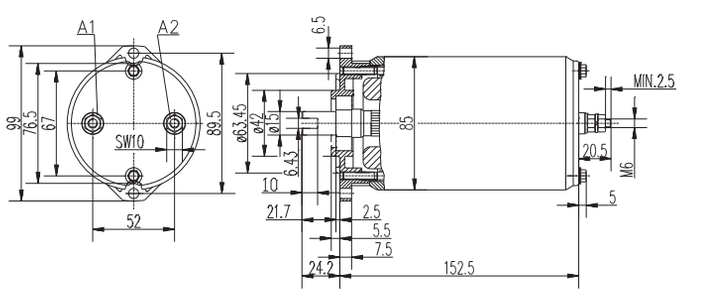

PICTURES NOT AVAILABLE

	TY	V	kW	RPM	OP	RO	IP	F	NOTES
IM0378	DC	24	3,0	3.300	S2=4 min S3=8%ED	→		Transport	IG/H

HYDAC FLUIDTECHNIK,MONTEC

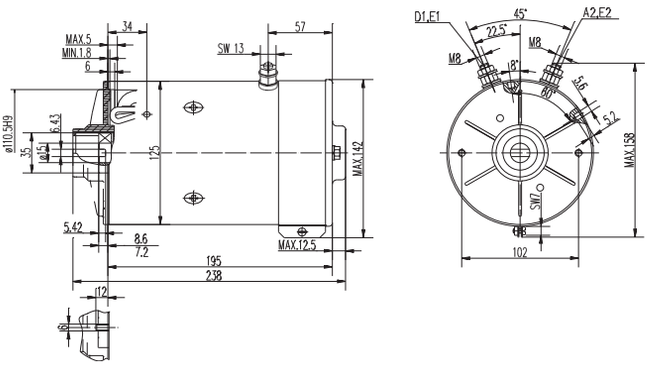

IM0379	DC	24	0,8	4.000	S2=2,5 min S3=8%ED	↔	IP65	Customer design	IG/O

QUICK

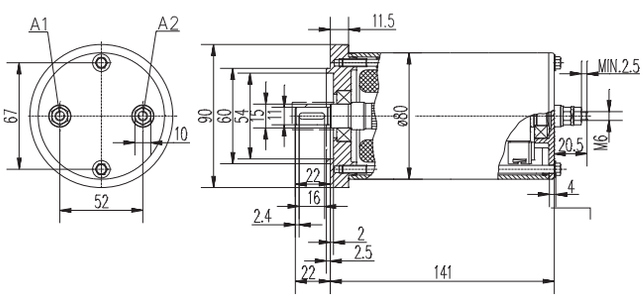

PICTURES NOT AVAILABLE

IM0380	DC	24	3,0	3.100	S2=13 min S3=28%ED	→	IP12	Customer design	IG/H/VT /HD

HYDRO-TEK

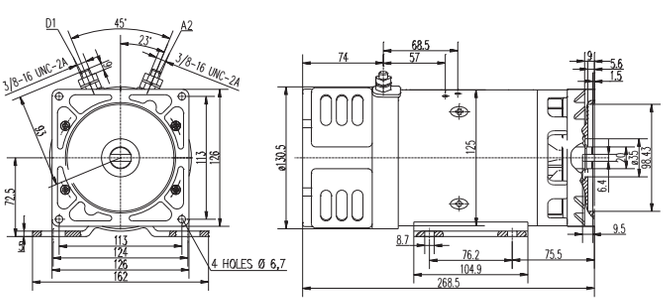

PICTURES NOT AVAILABLE

	TY	V	kW	RPM	OP	RO	IP	F	NOTES
IM0381	DC	24	3,0	2.600	S2=5 min S3=9%ED	→	IP23	Customer design	IG/H

HYDRO-TEK

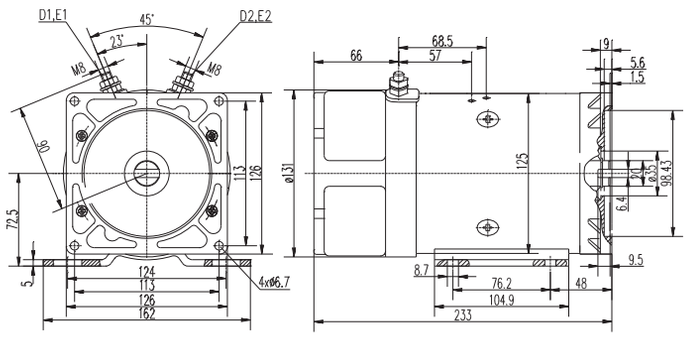

PICTURES NOT AVAILABLE

IM0382	DC	48	3,0	2.350	S2=2 min S3=5%ED	→	IP43	Transport	IG/H

BUCHER HYDRAULICS

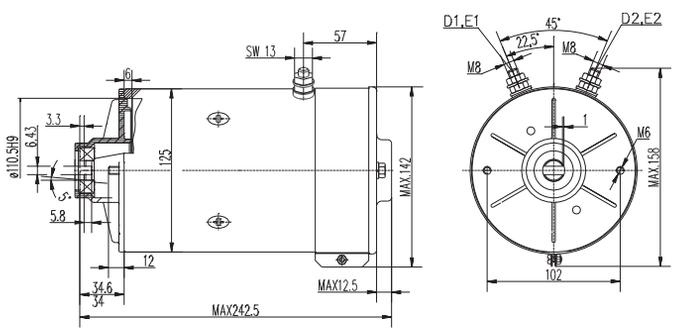

PICTURES NOT AVAILABLE

IM0385	DC	24	3,0	2.600	S2=6 min S3=16%ED	→	IP20	Transport	TP/IG/H /VT

HYDR-APP,HYDROVEN,BUCHER HYDRAULICS

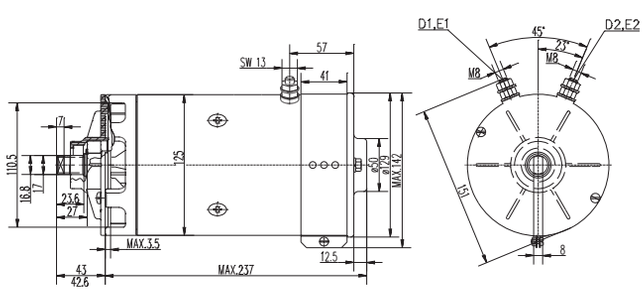

PICTURES NOT AVAILABLE

	TY	V	kW	RPM	OP	RO	IP	F	NOTES
IM0386	DC	12	0,5	2.500	S2=5 min S3=17%ED	→	IP54	Standard	IG/H

DHOLLANDIA

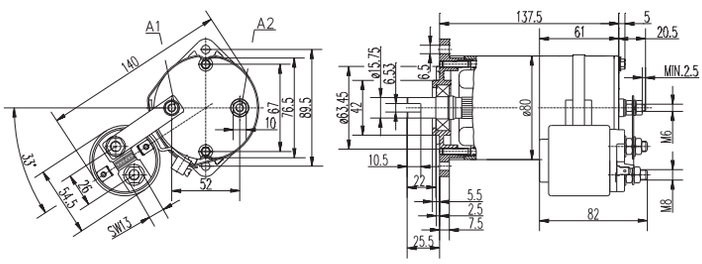

PICTURES NOT AVAILABLE

IM0387	DC	12	1,5	2.300	S2=1 min S3=5%ED	→	IP55	Bosch Round	TP/IG/H

BOSCH

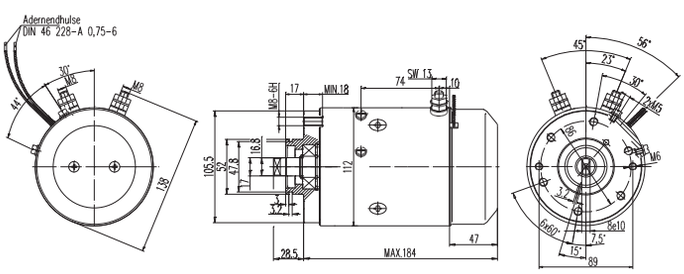

PICTURES NOT AVAILABLE

IM0388	DC	24	4,0	2.700	S2=4 min S3=10%ED	→	IP43	Customer design	TP/IG/H /HD

TUBE CONTROL

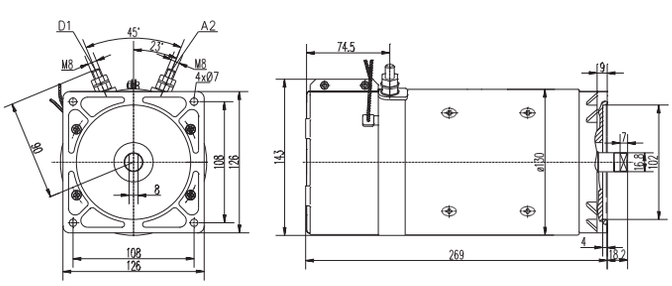

PICTURES NOT AVAILABLE

	TY	V	kW	RPM	OP	RO	IP	F	NOTES
IM0390	DC	24	1,5	3.500		↔	IP43	Customer design	TP/IG/O

DAISAN HAKUYO KOGYO

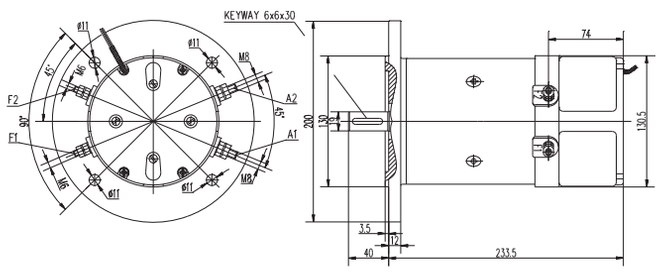

PICTURES NOT AVAILABLE

IM0392	DC	12	1,5	2.300	S2=1 min S3=5%ED	→	IP66	Bosch 40 X 40	IG/H

BOSCH

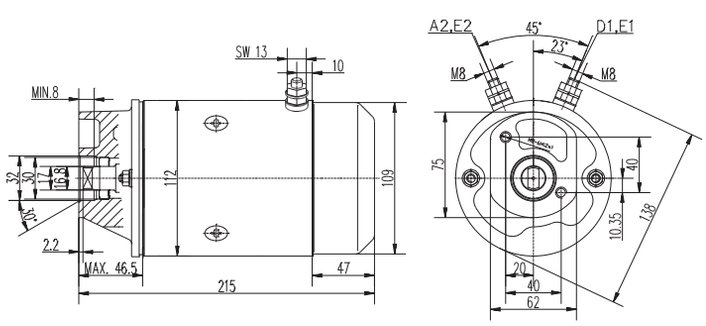

PICTURES NOT AVAILABLE

IM3002	BLMP	48	0,8	1.500	S2=60 min	→	IP54	Customer design	TP/IG/O

STEINBOCK,JUNGHEINRICH

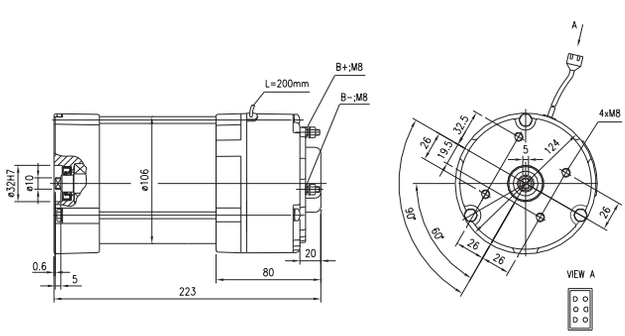

	TY	V	kW	RPM	OP	RO	IP	F	NOTES
IM3003	BLMP	48	0,8	1.500	S2=60 min	→	IP54	Customer design	TP/IG/O

STEINBOCK,JUNGHEINRICH

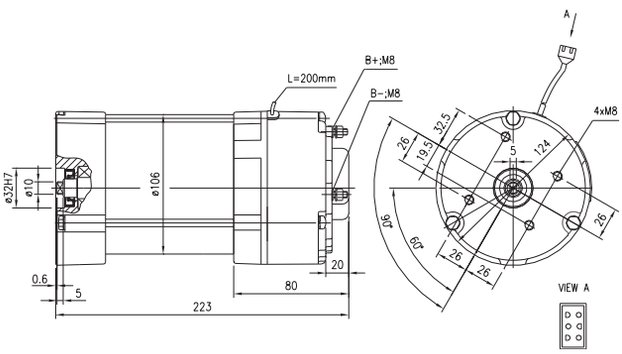

IM3005	BLMP	24	1,0	1.500	S1	←	IP54	Customer design	IG/O/VT

SPHEROS

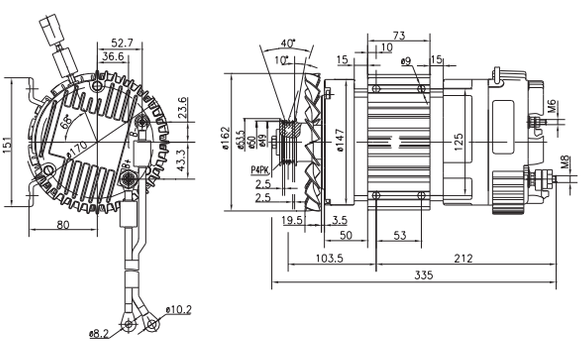

IM3006	BLMP	48	1,0	2.000	S1	→	IP54	Customer design	IG/O/VT

CARRIER SUTRAK

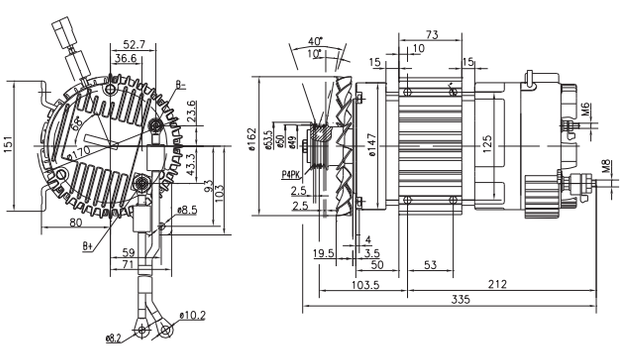

	TY	V	kW	RPM	OP	RO	IP	F	NOTES
IM3011	BLMP	24	1,0	1.500	S1	←	IP54	Customer design	IG/O/VT

WEBASTO,SPHEROS

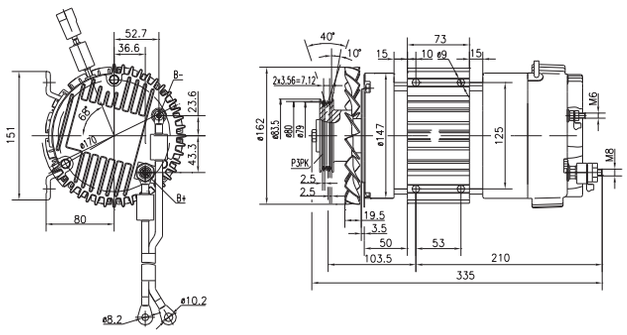

PICTURES NOT AVAILABLE

IM3016	BLMP	80	2,0	1.700	S2=30 min	→	IP54	Customer design	TP/IG/O

JUNGHEINRICH

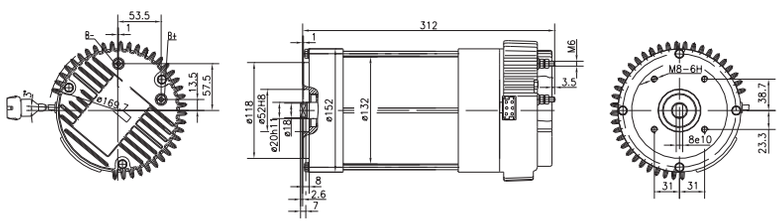

IM3018	BLMP	80	0,8	1.850	S2=60 min	→	IP54	Customer design	IG/O

SNDC

PICTURES NOT AVAILABLE

	TY	V	kW	RPM	OP	RO	IP	F	NOTES
IM3019	BLMP	80	1,2	2.100	S2=60 min	→	IP54	Customer design	IG/O

MCF

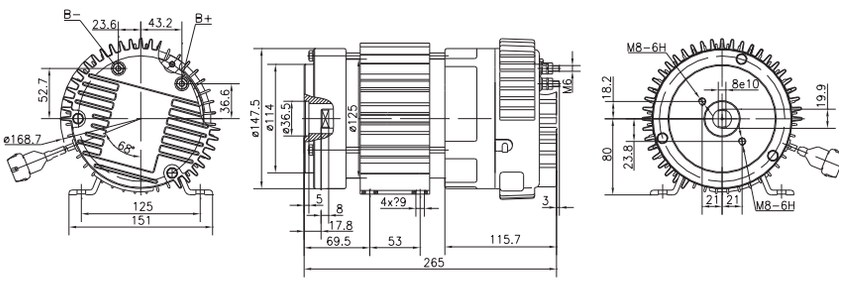

	TY	V	kW	RPM	OP	RO	IP	F	NOTES
IM3020	BLMP	24	1,0	1.500	S1	→	IP54	Customer design	IG/O/VT

CARRIER SUTRAK

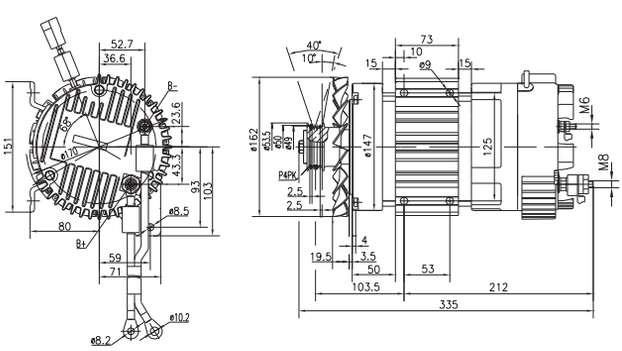

	TY	V	kW	RPM	OP	RO	IP	F	NOTES
IM3022	BLMP	80	0,4	1.800	S3=70%ED	↔	IP54	Customer design	IG/O

JUNGHEINRICH

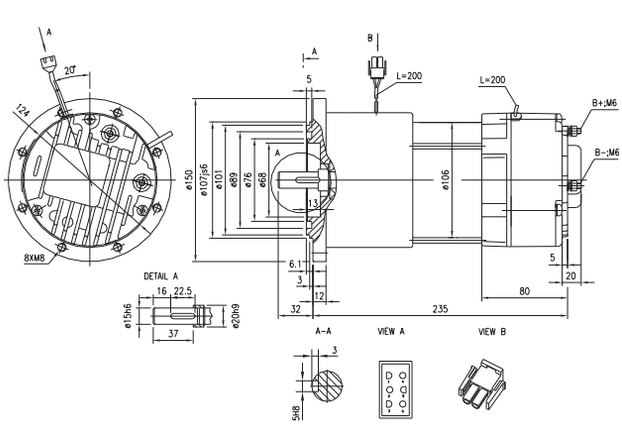

PICTURES NOT AVAILABLE

	TY	V	kW	RPM	OP	RO	IP	F	NOTES
IM3023	BLMP	80	1,2	2.100	S2=60 min	⟷	IP54	Customer design	TP/IG/O

JUNGHEINRICH

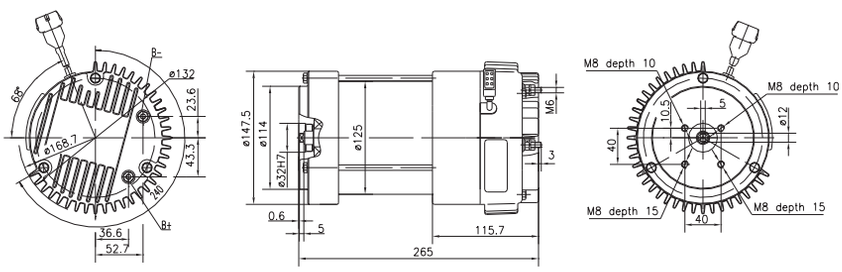

PICTURES NOT AVAILABLE

IM3025	BLMP	24	0,4	2.100		⟷	IP54	Customer design	IG/O

VIMEC

PICTURES NOT AVAILABLE

IM3026	BLMP	24	1,0	1.500	S1	←	IP54	Customer design	IG/O/VT

AURORA

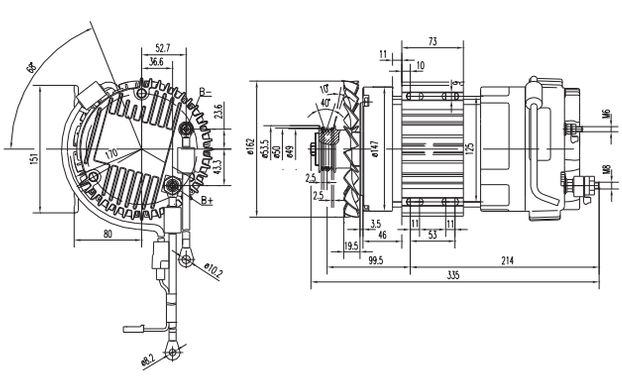

PICTURES NOT AVAILABLE

	TY	V	kW	RPM	OP	RO	IP	F	NOTES
IM3028	BLMP	24	1,0	1.500	S1	→	IP54	Customer design	IG/O/VT

KONVEKTA

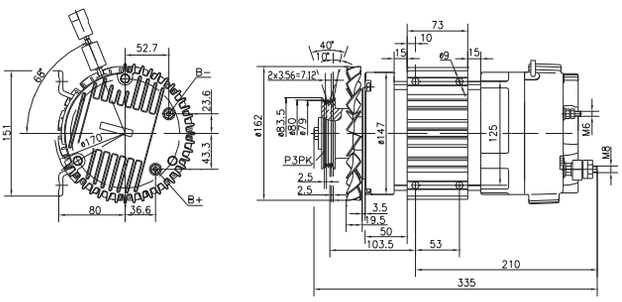

PICTURES NOT AVAILABLE

IM3029	BLMP	24	2,2	2.200	S2=60 min	↔	IP65	Customer design	TP/T

VEHICLE SYSTEMS ENGINEERING

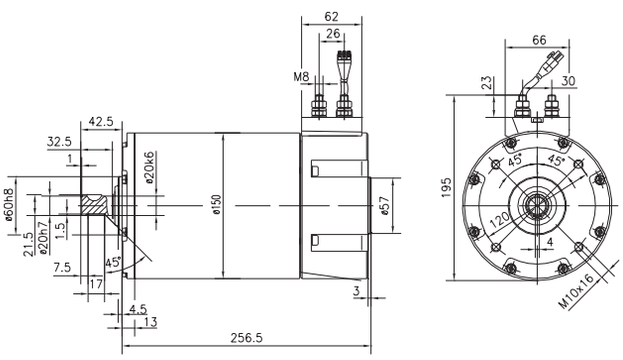

PICTURES NOT AVAILABLE

IM3031	BLMP	80	1,2	2.100	S2=60 min	→	IP54	Customer design	TP/IG/O

JUNGHEINRICH

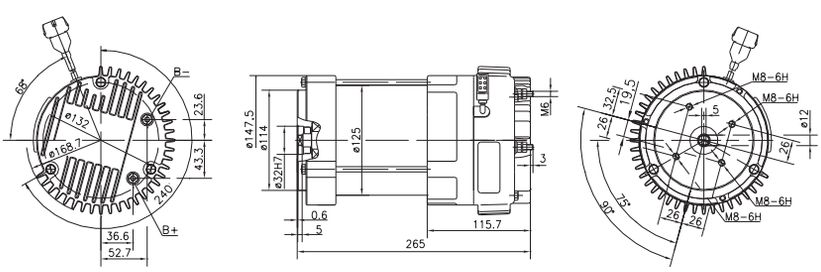

PICTURES NOT AVAILABLE

	TY	V	kW	RPM	OP	RO	IP	F	NOTES
IM3034	BLMP	80	1,2	2.100	S2=60 min	→	IP54	Customer design	TP/IG/O

MCF

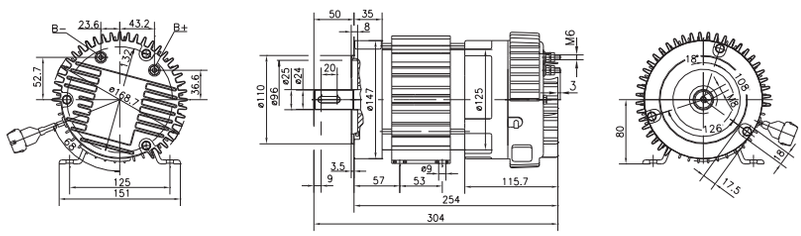

PICTURES NOT AVAILABLE

	TY	V	kW	RPM	OP	RO	IP	F	NOTES
IM3038	BLMP	12	0,8	2.000	S2=60 min	↔	IP65	Customer design	IG/O

ZF MARINE

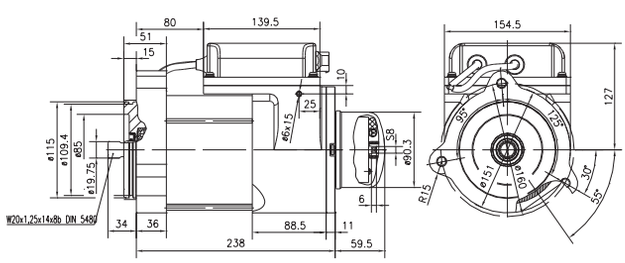

PICTURES NOT AVAILABLE

	TY	V	kW	RPM	OP	RO	IP	F	NOTES
IM3040	BLMP	80	2,0	1.700	S2=30 min S3=35%ED	←	IP54	Customer design	TP/IG/O

MCF

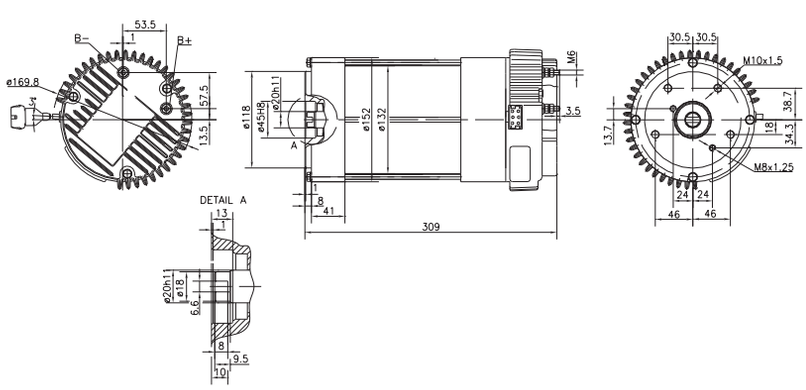

PICTURES NOT AVAILABLE

	TY	V	kW	RPM	OP	RO	IP	F	NOTES
IM3041	BLMP	12	0,5	1.800	S2=30 min	→	IP54	Customer design	IG/O

SNDC

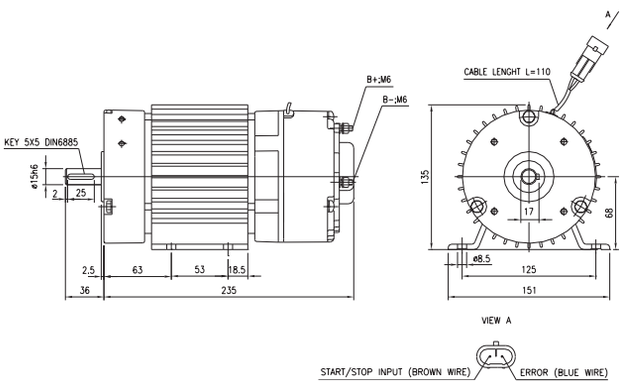

PICTURES NOT AVAILABLE

IM3042	BLMP	24	1,0	3.300	S2=60 min	↔	IP65	Customer design	IG/O

ZF MARINE

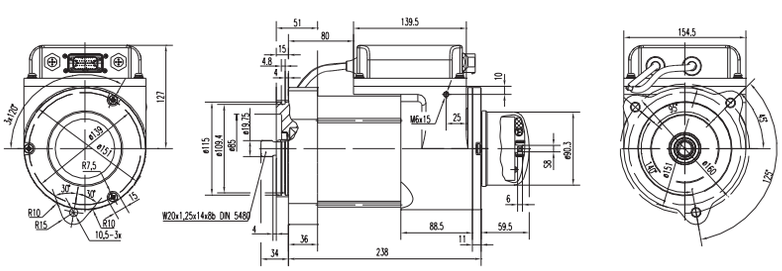

PICTURES NOT AVAILABLE

IM3043	BLMP	24	1,0	2.000	S2=60 min	↔	IP65	Customer design	IG/O

ZF MARINE

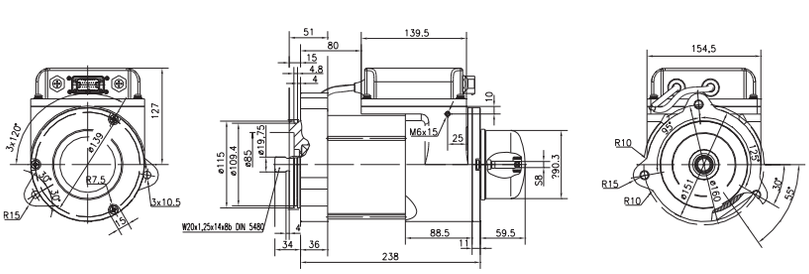

	TY	V	kW	RPM	OP	RO	IP	F	NOTES
IM3044	BLMP	12	0,8	3.000	S2=60 min	↔	IP65	Customer design	IG/O

ZF MARINE

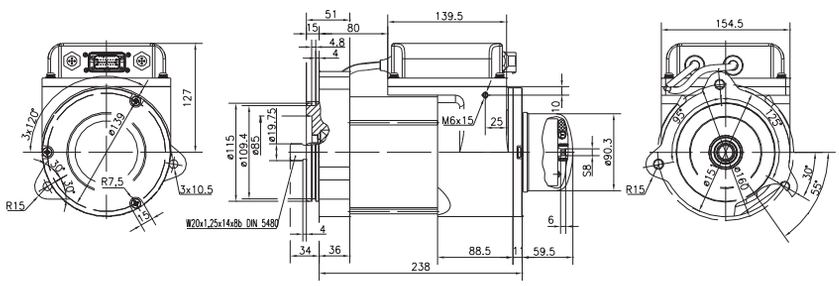

IM3045	BLMP	24	0,5	2.600	S2=45 min	→	IP54	Customer design	IG/O

SNDC

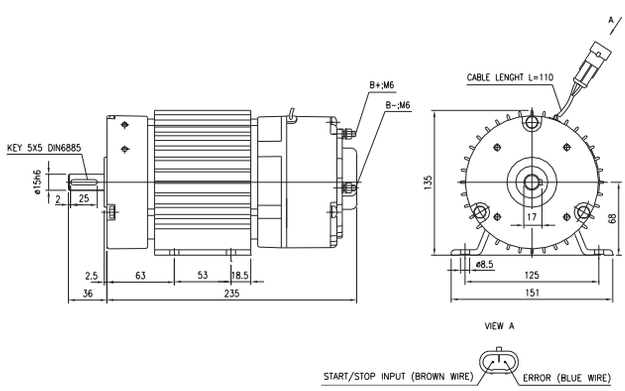

PICTURES NOT AVAILABLE

IM3049	BLMP	12	0,7	1.400	S1	→	IP54	Customer design	IG/O/VT

KONVEKTA

PICTURES NOT AVAILABLE

	TY	V	kW	RPM	OP	RO	IP	F	NOTES
IM3052	BLMP	24	0,5	2.600	S2=45 min	→		Customer design	TP/IG/O

KALERI

PICTURES NOT AVAILABLE

IM7004	AC	15	5,0		S2=60 min	↔	IP12	Customer design	TP/IG/T

MCF

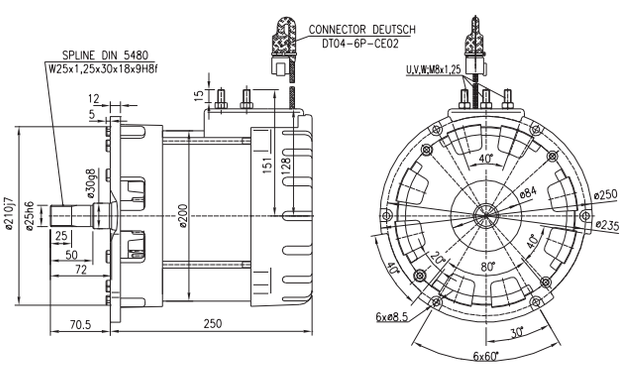

PICTURES NOT AVAILABLE

IM7005	AC	15	6,5		S3=15%ED	←	IP54	Customer design	TP/IG/H

MCF

PICTURES NOT AVAILABLE

	TY	V	kW	RPM	OP	RO	IP	F	NOTES
IM7013	AC	15	2,5		S2=60 min	⟷	IP54	Customer design	TP/IG/T

HAKO

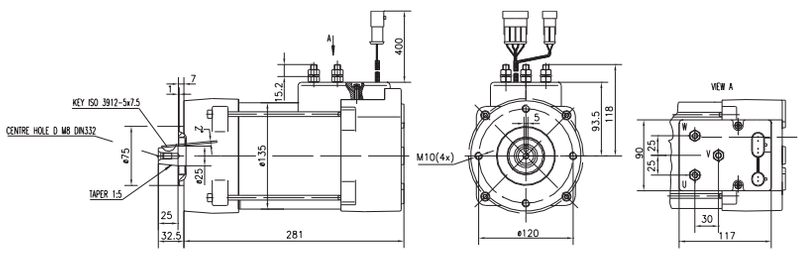

IM7020	AC	30	5,0		S2=60 min	⟷		Shaft-both end	TP/IG/T

CARRARO

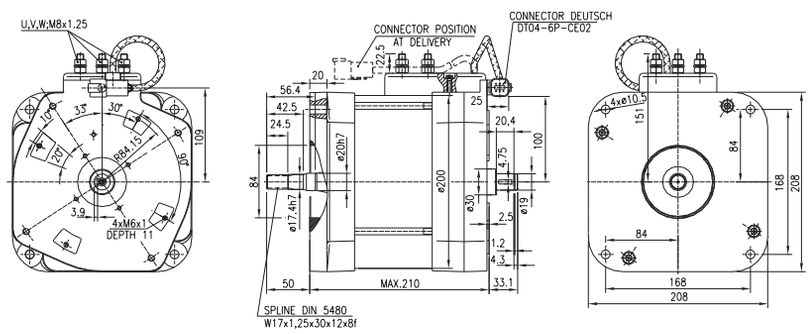

PICTURES NOT AVAILABLE

IM7024	AC	15	1,0		S2=60 min	⟷	IP21	Shaft-both end	TP/IG/T

ICEM

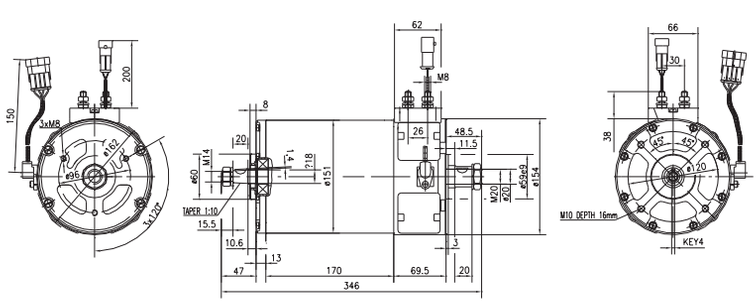

PICTURES NOT AVAILABLE

	TY	V	kW	RPM	OP	RO	IP	F	NOTES
IM7025	AC	15	2,0		S2=60 min	↔	IP21	Shaft-both end	TP/IG/T

ICEM

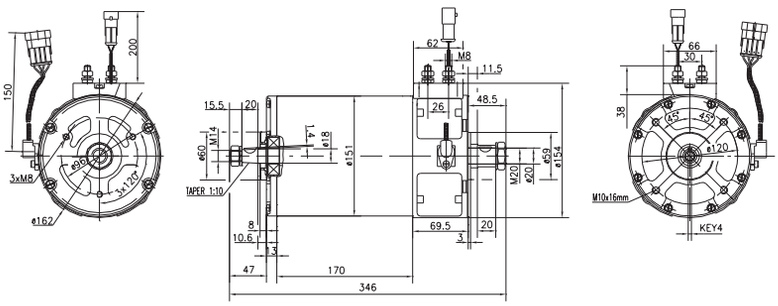

PICTURES NOT AVAILABLE

IM7027	AC	30	3,3		S2=60 min	↔	IP54	Customer design	TP/IG/T

MELEX

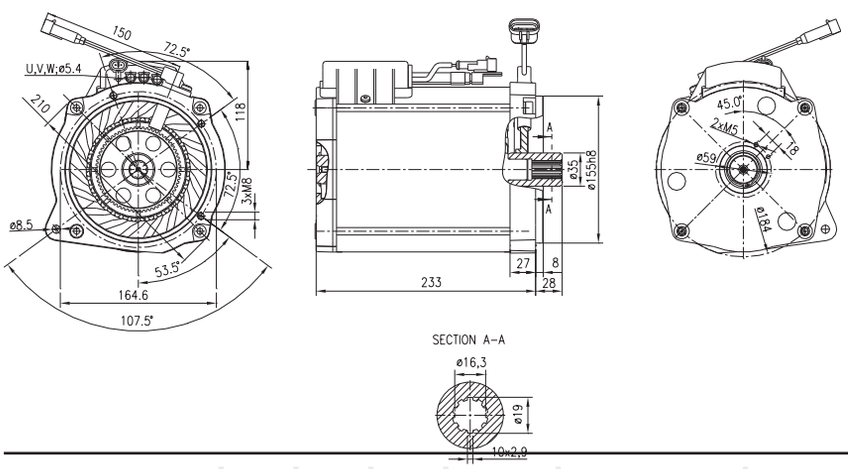

PICTURES NOT AVAILABLE

IM7031	AC	30	5,0		S2=60 min	↔	IP54	Customer design	TP/IG/T

MELEX

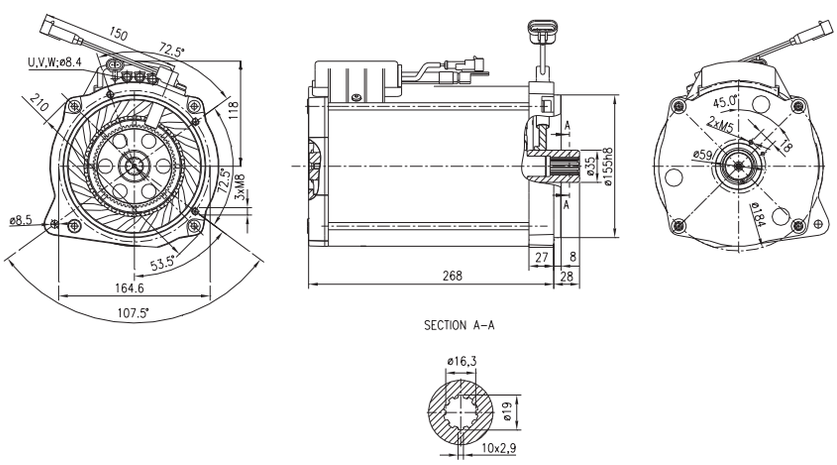

PICTURES NOT AVAILABLE

	TY	V	kW	RPM	OP	RO	IP	F	NOTES
IM7033	AC	15	1,5		S2=60 min	↔	IP20	Shaft-both end	TP/IG/T

COMER INDUSTRIES

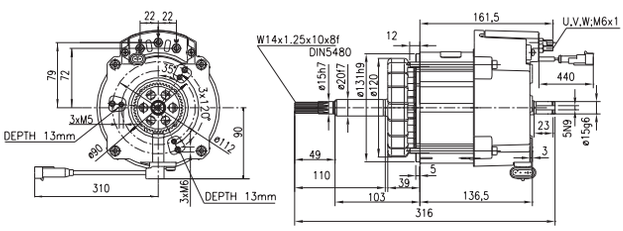

PICTURES NOT AVAILABLE

IM7040	AC	30	1,5		S2=60 min	↔	IP55	Shaft-both end	TP/IG/T

AICHI

PICTURES NOT AVAILABLE

IM7041	AC	30	4,0		S2=5 min	↔	IP55	Customer design	TP/IG/H

AICHI

PICTURES NOT AVAILABLE

	TY	V	kW	RPM	OP	RO	IP	F	NOTES
IM7043	AC	35	15,0		S2=1 min	↔	IP55	Customer design	TP/IG/T

PICTURES NOT AVAILABLE

EN Cross reference lists

DE Vergleichsnummern

FR Equivalences

IT Cross reference

A

A.V.I.	
610801200068	IM0038
610801200070	IM0039

AICHI	
322-00087	IM7040
322-00088	IM7041

AMRE	
11013	IM0082
11038	IM0070
11067	IM0081
12001	IM0083
12054	IM0073
12055	IM0088
2104	IM0074
2108	IM0075
2200	IM0139
2201	IM0139
2214	IM0140
2250	IM0068
2300	IM0069
2300	IM0077
2300	IM0084
2303	IM0078
2305	IM0079
2400	IM0076
2401	IM0076
2514	IM0108
2524	IM0065

ANTEO	
358.001	IM0039
358.032	IM0038
358.047.01	IM0057
358.049.01	IM0245
358.050.01	IM0246

ATLET	
004 767	IM0083
005 409	IM0097
005 692	IM0082
086 113	IM0052
100 119	IM0103
100 751	IM0040
103 397	IM0049

ATP HYDRAULIK	
125 800 030	IM0122

AURORA	
411-112-0018	IM3026

BAR CARGOLIFT	
01.123409	IM0270
01.139284	IM0270

BOSCH	
R918BN7138	IM0161
0 136 350 011	IM0159
0 136 350 012	IM0007
0 136 350 013	IM0132
0 136 350 014	IM0137
0 136 353 010	IM0026
0 136 353 011	IM0026
0 136 355 012	IM0139
0 136 355 013	IM0142
0 136 355 014	IM0139
0 136 355 037	IM0139
0 136 355 038	IM0139
0 136 355 042	IM0139
0 136 355 054	IM0136
0 136 355 057	IM0139
0 136 355 058	IM0142

BOSCH	
0 136 355 058	IM0140
0 136 355 061	IM0139
0 136 355 067	IM0139
0 136 355 068	IM0140
0 136 355 070	IM0139
0 136 355 071	IM0140
0 136 355 071	IM0142
0 136 355 076	IM0142
0 136 355 080	IM0054
0 136 355 081	IM0055
0 136 402 007	IM0063
0 136 500 030	IM0095
0 136 500 032	IM0068
0 136 500 033	IM0069
0 136 500 035	IM0070
0 136 500 040	IM0072
0 136 500 042	IM0073
0 136 501 010	IM0077
0 136 501 031	IM0076
0 136 501 032	IM0077
0 136 501 039	IM0083
0 136 501 052	IM0074
0 136 501 053	IM0075
0 136 501 054	IM0076
0 136 501 055	IM0077
0 136 501 057	IM0078
0 136 501 058	IM0079
0 136 501 059	IM0080
0 136 501 060	IM0081
0 136 501 061	IM0082
0 136 501 062	IM0083
0 136 501 069	IM0084
0 136 501 070	IM0085
0 136 501 072	IM0087
0 136 501 073	IM0088
0 136 501 075	IM0090
0 136 501 076	IM0091
0 136 501 077	IM0092
0 136 501 079	IM0206
0 136 501 082	IM0093
0 136 501 083	IM0094
0 136 501 084	IM0095
0 136 501 085	IM0096
0 136 501 087	IM0097
0 136 501 089	IM0099
0 136 501 091	IM0100
0 136 501 092	IM0101
0 136 501 095	IM0103
0 136 501 096	IM0367
0 136 501 097	IM0104
0 136 501 255	IM0077
0 136 503 007	IM0065
0 136 503 010	IM0065
0 136 603 001	IM0107
0 136 603 002	IM0108
0 541 000 009	IM0140
0 541 100018	IM0140
0 541 100 019	IM0140
0 541 100 020	IM0136
0 541 200 042	IM0139
0 541 200 047	IM0139
0 541 200 049	IM0076
0 541 200 050	IM0076
0 541 300 033	IM0139
0 541 300 036	IM0076
0 541 300 040	IM0076
0 541 300 043	IM0078
0 541 400 039	IM0139
0 541 400 041	IM0076
0 541 400 044	IM0076
0 541 400 046	IM0076
0 541 400 048	IM0078
0 541 500 044	IM0076
0 541 500 055	IM0076

BOSCH	
0 541 500 057	IM0078
0 541 500 058	IM0077
0 541 500 059	IM0076
0 541 600 034	IM0139
0 541 600 036	IM0076
1 517 220 500	IM0139
1 517 220 510	IM0136
1 517 220 511	IM0142
1 517 220 514	IM0023
1 517 220 515	IM0140
1 517 220 520	IM0139
1 517220 521	IM0140
1 517 220 522	IM0142
1 517 220 523	IM0139
1 517 220 524	IM0181
1 517 220 528	IM0035
1 517 220529	IM0026
1 517 220 530	IM0044
1 517 220 533	IM0135
1 517 220 535	IM0136
1 517 220 536	IM0111
1 517 220 538	IM0068
1 517 220 539	IM0069
1 517 220 540	IM0076
1 517 220 541	IM0077
1 517 220 541	IM0077
1 517 220 542	IM0078
1 517 220 543	IM0079
1 517 220 544	IM0080
1 517 220 545	IM0084
1 517 220 546	IM0065
1 517 220 547	IM0099
1 517 220 549	IM0072
1 517 220 553	IM0334
1 517 220 556	IM0139
1 517 220 557	IM0135
1 517 220 558	IM0139
1 517 220 561	IM0136
1 517 220 562	IM0140
1 517 220 564	IM0139
1 517 220 566	IM0136
1 517 220 567	IM0142
1 517 220 569	IM0334
1 547 200 511	IM0128
1 547 220 500	IM0161
1 547 220 502	IM0387
1 547 220 506	IM0161
1 547 220 510	IM0124
1 547 220 511	IM0128
1 547 220 516	IM0230
1 547 220 524	IM0161
1 547 220 527	IM0161
1 547 220 531	IM0188
1 547 220 532	IM0161
1 547 220 535	IM0161
1517220575	IM0392
R918BM5404	IM0080
R918BM7165	IM0161
R918BM7168	IM0161
R918BM7170	IM0161
R918BN7151	IM0230
R918BN7167	IM0188
R918ZN7138	IM0161
R918ZN7151	IM0230
R918ZN7165	IM0161
R918ZN7167	IM0188
R918ZN7168	IM0161
R918ZN7170	IM0161

BUCHER HYDRAULICS (HIDROIRMA)	
200 5439 122010	IM0121
200 5439 12801	IM0128
200 5439 13411	IM0018
200 5439 13416	IM0003

BUCHER HYDRAULICS (HIDROIRMA)

200 5439 13419	IM0259
200 5439 13501	IM0036
200 5439 13503	IM0261
200 5439 13901	IM0012
200 5439 21603	IM0385
200 5439 22201	IM0191
200 5439 23201	IM0124
200 5439 23808	IM0019
200 5439 23812	IM0021
200 5439 23813	IM0004
200 5439 23817	IM0258
200 5439 24001	IM0021
200 5439 24002	IM0260
200 5439 24600	IM0257
200 5439 24601	IM0263
200 5439 24602	IM0257
200 5439 24806	IM0184
200 5439 24821	IM0077
200 5439 24822	IM0037
200 5439 33803	IM0022
200 5439 348010	IM0382
200 7633 20060	IM0184
543 912 804	IM0128
543 912 806	IM0128
543 913 411	IM0018
543 913 415	IM0036
543 913 416	IM0003
543 913 901	IM0012
543 922 901	IM0124
543 923 203	IM0124
543 923 801	IM0004
543 923 808	IM0019
543 923 812	IM0021
543 923 813	IM0004
543 923 813	IM0002
543 924 806	IM0184
543 933 803	IM0022
599 999 047	IM0003
C128AE/S0	IM0128
C128PE/X0	IM0128
C134AK/O0	IM0001
C229PE/Y0	IM0124
C232AE/R0	IM0124
C238AK/P0	IM0002

C.C. ENGINEERING

12V500W	IM0121
12V800W	IM0128

CARRARO

64 4636	IM7020

CARRIER SUTRAK

28.02.30.014	IM3020

CASAPPA

4700280	IM0006

CIMM

679251	IM0272
679818	IM0301

CLARK

3799747	IM0107

CODASA INDUSTRIES

820229019	IM0142

COMER INDUSTRIES

D 103511	IM7033
D100513	IM0281
D100514	IM0282
D100521	IM0281

COMER INDUSTRIES

D100522	IM0282

CONCORD

103481	IM0124

DAF

609391	IM0139
697710	IM0139
MCB 20-24	IM0006

DAUTEL

06733	IM0054
06734	IM0055
06736	IM0011
65980	IM0057
84522	IM0028

DELCO REMY

19024669	IM0028
19024678	IM0055
19024689	IM0028
19024690	IM0029
19024695	IM0001
19024696	IM0002
19024698	IM0128
19024706	IM0054
19024709	IM0008
19024710	IM0159
19024731	IM0030
19024732	IM0030

DHOLLANDIA

HMP04.R	IM0386
MP021	IM0011
MP025	IM0055
MP027	IM0054

E.M.S.

G 1301-I 116/12	IM0001
G 1301-I 116/24	IM0002
G 1303-D 150/A	IM0077
ISK005	IM0044

EFEL

36307	IM0001
36315	IM0002
36316	IM0002
36368	IM0001
36392	IM0001
36531	IM0028
36576	IM0055
36606	IM0159
36608	IM0008
36609	IM0008
36611	IM0028
36612	IM0029
36629	IM0001
36631	IM0002
36644	IM0128
36657	IM0124
36676	IM0054
36681	IM0008
36682	IM0159
36711	IM0128
36721	IM0124
36724	IM0159
36728	IM0008
36806	IM0032
36808	IM0030
36809	IM0030

ERHEL

101250-11	IM0032

ERHEL

101250-1124	IM0030
101250-13	IM0032
102450	IM0030
102680	IM0030
111260-11	IM0030
195 665	IM0032
195 666	IM0030
195 726	IM0041
195 727	IM0020

FAIST COMPONENTI

2590001	IM0119
2590002	IM0275
2590003	IM0254

FAIVELEY TRANSPORT GROUP

12289602	IM0364
123431	IM0122

FENDT

003 976 111 101	IM0101
039 761 110 001	IM0090

FENWICK

0 039 761 110	IM0090
0 039 761 111	IM0101

FER

131 290 087	IM0032
131 290 089	IM0030
131 290 098	IM0030
131 290 103	IM0032
131 290 104	IM0030
131 290 133	IM0030

FIAT

9296631	IM0069
9449196	IM0081
9451212	IM0074
9451222	IM0074
9451223	IM0075
9459066	IM0069

FLUID PACK

0898	IM0317
8051	IM0315

FLUIDLINK HYDRAULICS LTD

FL101688-1-24	IM0211
FL101688-2-12	IM0196
FL101688-3-12-24	IM0197
FL101688-5-12	IM0209
FL101688-5-24	IM0210
FL102020-24	IM0016
FL102680-13-12	IM0032
FL102680-13-24	IM0030
FL102680-30-12	IM0033
FL102680-30-24	IM0034

FLUITRONICS (BERENDSEN)

1232694	IM0008
1233006	IM0121
1239111	IM0128
1239113	IM0124
1239119	IM0122
1239556	IM0021
1239682	IM0012
1240022	IM0136
1240040	IM0077
1240040	IM0077
1240242	IM0022
1240244	IM0140

F

FLUITRONICS (BERENDSEN)	
1240245	IM0181
1240247	IM0050
1240631	IM0077
1257362	IM0044
1285363	IM0334
1317713	IM0076
1326868	IM0021
1329512	IM0122
1334220	IM0350
1343246	IM0139
1418258	IM0142
1419241	IM0131
1419755	IM0145
1420269	IM0145
1421400	IM0078
1422779	IM0004
1423472	IM0145
1429864	IM0175
9000160912	IM0128
9000162812	IM0121
9000162924	IM0122
9000421102	IM0021
9000425602	IM0012
9000438101	IM0136
9000439001	IM0077
9000464324	IM0076
9000513348	IM0022
9000518524	IM0139
9000554924	IM0140
9000566912	IM0050
9000568224	IM0044
9002401510	IM0077
9005662483	IM0230
9011212560	IM0021

GEORGI KOSTOV	
EC 1.5/1.2/27	IM0028
EC 1.5/2.4/27	IM0029
EC 2/1.2/23	IM0054
EC 2/1.2/23-02	IM0028
EC 2/2.4/23	IM0055
EC 2/2.4/23-02	IM0029
EC 3/2.4/35-02	IM0011

GRUAU	
LFBU8SP10186	IM0045

HAKO	
90815945	IM7013
90-70160-8	IM0017

HALDEX HYDRAULICS	
220 0355	IM0159
220 0356	IM0007
220 0525	IM0159
220 0526	IM0007
220 0870	IM0159
220 0871	IM0007
220 0972	IM0138
220 0975	IM0132
220 0976	IM0137
220 1054	IM0284
220 1087	IM0309
220 1088	IM0045
220 1089	IM0306
220 1115	IM0305
220 1117	IM0304
220 1122	IM0310
220 1123	IM0311
220 1126	IM0312
220 1153	IM0132
2201094	IM0133
260 42K01	IM0138

HARKEN	
G060104024E	IM0289
G060105012E	IM0290
G060106024E	IM0288
G060107012E	IM0287
G060154012E	IM0307
G060157024E	IM0308

HCT LUX	
113847	IM0077
4240	IM0145
49863	IM0145
75717	IM0256

HESSELMAN	
12 M1 TP 13	IM0054
12 MB 11 M	IM0054
12 MB 11 TWA	IM0054
12 MB 12 M	IM0054
12 MB 12 TWA	IM0054
24 M1 TP 13	IM0055
24 MB 21 M	IM0055
24 MB 21 TWA	IM0055
24 MB 22 TWA	IM0055
24 MB 22M	IM0055
24 MB1 TWA	IM0055
24 MC4 2 TWA	IM0011
24 MC4 TWA	IM0011

HPI	
105 020	IM0041
106 513	IM0176
106 671	IM0041
106 671 A	IM0041
106 671 B	IM0041
106 671 C	IM0041
106 678	IM0020
106 720	IM0176
106 720 C	IM0176
106 721	IM0177
106 721 C	IM0177
107 264	IM0045
109 512	IM0120
109 589	IM0041
109 914	IM0041
109 915	IM0020
110 677	IM0041
110 678	IM0020
110 806	IM0041
111 895	IM0045
112 373	IM0162
112 648	IM0141
112649	IM0141
113 305	IM0143
113 349	IM0144
114 134	IM0163
114 561	IM0328
114 563	IM0163
114 785	IM0141
114 806	IM0221
114 855	IM0224
115434	IM0144
506 521	IM0041
506 523	IM0041

HURTH	
RA 150 006-24V	IM0091
RS 150 003-24V	IM0087
RS 150 015-24V	IM0088

HYDAC B.V.	
7500000166	IM0128

HYDAC FLUIDTECHNIK	
3058706	IM0270
3063357	IM0378
3073639	IM0361
3123175	IM0241
3199109	IM0357
3199144	IM0359
3252009	IM0022
3254510	IM0352
3273338	IM0192
3298557	IM0358
6017279	IM0195
6017280	IM0194

HYDAC TECHNOLOGY	
02581262	IM0192
02582327	IM0277
03063357	IM0241

HYDR-APP	
24 005 800	IM0129
24 005 900	IM0130
24 006 000	IM0159
24 006 100	IM0008
24 006 100	IM0008
24 007 500	IM0119
24 007 700	IM0145
24 007 700	IM0385
24 008 100	IM0009
24 009 400	IM0331
24 010 000	IM0145
24 010 600	IM0119
24 010 900	IM0145
24 011 200	IM0121
24 011 400	IM0201
24 012 300	IM0130
24 109 900	IM0145
25 006 000	IM0285
25 006 300	IM0203
25 006 400	IM0204
25 010 800	IM0285

HYDRAULICFUNKTION AB	
1024	IM0055
105649	IM0003
1424	IM0139

HYDRIS	
223 6001	IM0030
223 6007	IM0030
223 6013	IM0030

HYDRO LEDUC	
310419	IM0303

HYDRO-TEK	
D230IC	IM0381
HMP25	IM0055
HMP27	IM0054
L230IC	IM0380

HYDROKIT	
COK5BI1	IM0122
COK5BI1	IM0122

HYDROTECHNIC	
0 318 101	IM0001
0 318 103	IM0030
0 318 151	IM0002

HYDROVEN	
56150A050E2K	IM0247
56150A080E1K	IM0247

HYDROVEN	
56150A080F1K	IM0175
56150B050E0K	IM0191
56150B080F1K	IM0182
56250A150L5K	IM0186
56250A160L2K	IM0039
56250B220L2K	IM0038
56250B220L5K	IM0047
56250B22L2K	IM0038
56250B300R5K	IM0385
56260B300R5K	IM0044

ICEM	
10 30 418	IM0082
10 30 419	IM0083
10 30 579	IM0052
10 30 618	IM0267
10 30 619	IM0266
11 60 333	IM0145
29 60 023	IM0009

JUNGHEINRICH	
51014136	IM3031
05094100	IM3002
05099362	IM3031
50028566	IM0161
50107780	IM3002
50122508	IM3031
50143666	IM3031
50207647	IM3002
50293778	IM3003
50308332	IM3002
5107529	IM3003
52005150	IM3016
52028084	IM3023

JUST PARTS	
PR2-0067N	IM0159
PR2-0068N	IM0007

KAESSBOHRER	
7 432 007 000	IM0083

KION	
8004539	IM0084
8004834	IM0092
8402336	IM0095
8402914	IM0094
8405546	IM0367
8405700	IM0104
921678	IM0095

KONVEKTA	
H11-002-232	IM3028

LEWMAR MARINE	
60000189	IM0178
60000190	IM0179
60000191	IM0220
60000192	IM0226
60000222	IM0213
66200206	IM0228
66200207	IM0229

LOFRANS WINDLASSES	
12V1500W	IM0113
12V700W	IM0115

LUCAS	
470 41 001	IM0041
470 41 002	IM0020
470 41 003	IM0041
470 41 004	IM0020

LUCAS	
470 44 603	IM0041
470 44 604	IM0020
470 44 605	IM0032
470 44 606	IM0030
470 44 608	IM0032
470 44 608	IM0050
470 44 616	IM0032
470 44 617	IM0030
470 44 620	IM0041
470 44 621	IM0020
470 44 625	IM0020
470 44 626	IM0041
470 44 628	IM0020
470 44 630	IM0041
470 44 902	IM0045
470 44 910	IM0045
470 45 803	IM0176
470 45 804	IM0177
470 45 826	IM0177
470 45 903	IM0176
470 45 904	IM0177
470 45 913	IM0176
470 45 914	IM0177
470 45 926	IM0177
580 03	IM0176
TM 4334	IM0041
TM 4335	IM0020

MARIOTTI	
SCMELP2431	IM0044
SCMELP243HI	IM0322
SCMELP3651	IM0111

MARREL	
28679 R	IM0055
350015 A	IM0054

MBB PALFINGER	
1058500	IM0161
12988059	IM0057
1404309	IM0270
1404310	IM0028
1410332	IM0028
1410333	IM0270
2001004	IM0057
2020615	IM0270

MCF	
91T01-00400	IM3034
91T46-00500	IM3040
97020-10400	IM0180
97020-20400	IM0180
97B20-17100	IM3019
97M20-00900	IM7005
97M20-01100	IM7004
97M20-30200	IM0369

MERLO	
63113	IM0186

MIC	
2000 81 290	IM0041
2000 81 300	IM0020
2001 35 990	IM0020

MONARCH	
18442	IM0320
8004	IM0214
8013	IM0313
8023	IM0155
8029	IM0314
8036	IM0156
8044	IM0157

MONARCH	
8045	IM0316
8051	IM0315
8053	IM0164
8055-I	IM0319
8058	IM0222
8111	IM0222
8120-I	IM0368
8189	IM0216
8211	IM0318
8223	IM0321
8251	IM0317

MONTEC	
9-3058706	IM0270
9-560482	IM0378
9-560482	IM0241
9-561475	IM0194
9-561476	IM0195
9-618914	IM0361

MTE	
392 00 424	IM0025
392 00 428	IM0024
392 00 431	IM0152
392 00 485	IM0151

NACCO	
1516080	IM0281
1520544	IM0282
2042533	IM0168
8507289	IM0234
8519015	IM0234

OIL SISTEM	
31-SL-00605	IM0022
c 162 0S1 006	IM0058
c162 010 000	IM0028
c162 011 000	IM0029
c162 039 000	IM0121
c162 040 000	IM0122
c162 066 000	IM0126
c162 073 000	IM0055
c162 077 000	IM0186
c162 078 000	IM0047
c162 081 061	IM0293
c162 084 000	IM0128
c162 085 000	IM0022
c162 085 000	IM0232
c162 086 000	IM0054
c162 087 000	IM0055
c162 090 000	IM0028
c162 091 000	IM0029
c162 092 000	IM0123
c162 093 000	IM0127
c162 094 000	IM0118
c162 095 000	IM0158
c162 099 000	IM0044
c162 0S1 002	IM0117
c162 0S1 003	IM0057
c162 0S1 004	IM0170
c162 0S1 005	IM0192
c162 0S1 007	IM0191
c162 0S1 011	IM0169
c162 0S1 019	IM0036
c162 0S1 020	IM0279
c162 0S1 020	IM0021
c162 0S1 022	IM0194
c162 0S1 023	IM0195
c162 0S1 029	IM0323
c162 0S1 030	IM0250
c162 0S1 031	IM0034
c162 0S1 040	IM0248
c162 0S1 042	IM0243

OIL SISTEM	
c162 0S1 043	IM0238
c162 0S1 046	IM0029
c162 0S1 047	IM0250
c162 0S1 054	IM0279
c162 0S1 058	IM0295
c162 0S1 059	IM0298
c162 0S1 064	IM0341
c162 0S1 071	IM0355

OLEODINAMICA L.C.	
31-00602	IM0183
31-00613	IM0193
31SL-00491	IM0127

OLEODINAMICA REGGIANA	
M46I16021	IM0159
M46I1S008	IM0129
M46I1S021	IM0041
M46I2S008	IM0130
M46I2S021	IM0020

OM CARRELLI ELEVATORI	
87905012	IM0037
9452464	IM0085
95350080	IM0205

OMFB	
14 916 500 105	IM0005
14 916 500 123	IM0006
14 916 500 203	IM0128
14 916 500 221	IM0124

OTTO NUSSBAUM	
992100	IM0244

PARIS-RHONE	
M 11 C 40	IM0032

PARKER HANNIFIN	
715141	IM0284
HR21503372	IM0077

PEDRO ROQET	
8957/197/2.00	IM0051

PIMESPO / IVECO	
0 22404	IM0073
0 22405	IM0070
0 22436	IM0140
0 22437	IM0139
0 22439	IM0077
0 28094	IM0088
73 204 007	IM0063
87 905 012	IM0037
9449196	IM0081
9452 464	IM0085
9452 830	IM0069
95 301 033	IM0096
95 302 028	IM0088
9836 128	IM0139
9836 402	IM0077
9836 662	IM0140

POWER-HYDRAULIK GMBH	
700 000 453	IM0025

PRESTOLITE	
MBJ-4407	IM0042
MDF-7024	IM0030
MDY-6107	IM0171
MDY-6116	IM0171
MDY-7066	IM0032

PRESTOLITE	
MHJ-7003	IM0030
MHJ-7005	IM0030
MHJ-7024	IM0030
MHX-4001	IM0030
MMD-4401	IM0043
MUE-6102S	IM0159
MUF-6102S	IM0007

PRODCEN	
HMP25	IM0055
HMP27	IM0054

QUICK	
EMF 051 200 000	IM0337
EMF 052 400 000	IM0379
EMF 071 200 000	IM0115
EMF 072 400 001	IM0114
EMF 101 200 000	IM0113
EMF 102 400 000	IM0112

RATCLIFF TELL LIFTS	
4696-018-0	IM0166
4696-111-5	IM0030
4696-112-4	IM0031
4696-113-3	IM0032
4696-137-3	IM0249

RELATED FLUID POWER	
Z-EMDC-1A-AAG	IM0151
Z-EMDC-1A-ACB-C	IM0330
Z-EMDC-2A-AAG	IM0152
Z-EMDC-2A-ACE-C	IM0048
Z-EMDC-2A-AKE-C	IM0200
Z-EMDC-2D-ACJ-C	IM0329
Z-EMDC-2E-AEM	IM0077
Z-EMDC-2E-AEQ	IM0324
Z-EMDC-6E-AEM	IM0079

ROCLA	
466645	IM0065
475632	IM0286

SAMAG	
E 190 007	IM0136
E 190 009	IM0139
E 190 010	IM0068
E 190 011	IM0077
E 190 020	IM0161
E 190 021	IM0139
E 190 023	IM0136
E 190 024	IM0161
E 190 21	IM0139

SAVERY	
4109-0402	IM0079
4109-4106	IM0022
8106-0001	IM0119
8106-0201	IM0121
8106-0203	IM0128
8106-0214	IM0128
8106-1001	IM0007
8106-1003	IM0127
8106-1121	IM0122
8106-1184	IM0284
8106-1185	IM0251
8106-1301	IM0016
8106-14658	IM0353
8106-17004	IM0155

SIDES	
268283P101	IM0007
61830034ZZ	IM0251

SMOES	
CC12V1600W	IM0117
CC12V1600WCONT	IM0039
CC12V500W	IM0121
CC12V800W	IM0128
CC24V2100W	IM0038

SNDC	
540F70	IM3041
540F71	IM3045

SPHEROS	
1103308A	IM3011
1103308B	IM3011
11114530A	IM3005

SPX FLUID POWER (FENNER)	
1788 AC	IM0185
1789 AC	IM0208
1792 AC	IM0165
1793 AC	IM0166
MF 4114	IM0167
MF-4030	IM0051
MF-4034	IM0050
MF-4042	IM0172
MF-4047	IM0249

SPX FLUID POWER (SMITHS)	
101688-1-24	IM0211
101688-2-12	IM0196
101688-3-12-24	IM0197
101688-4-12	IM0209
101688-5-12	IM0209
101688-5-24	IM0210
101820-13-12	IM0032
101820-13-24	IM0030
101820-30-12	IM0033
101820-30-24	IM0034
101820-4-12	IM0031
102020-24	IM0016
102020-48	IM0231
102450-4-05	IM0021
102680-13-12	IM0032
102680-13-24	IM0030
102680-30-12	IM0033
102680-30-24	IM0034
102680-4-12	IM0031

STEINBOCK	
5091327	IM3031
5099362	IM3031

STILL SAXBY	
WA 401 684	IM0094
WA 401 685	IM0095
WA 405 700	IM0104

STILL WAGNER	
0 04834	IM0092
4 01684	IM0094
4 01685	IM0095
4 05700	IM0104
8 004539	IM0084
8 004834	IM0092
8 402336	IM0095
8 402914	IM0094
8 405700	IM0104
9 21678	IM0095

SUPERWINCH	
4-174-001	IM0219
4-174-002	IM0225
7682	IM0146
7694	IM0147

SUPERWINCH	
90-33333	IM0223
90-33334	IM0227

TEKNO	
1279	IM0122
1781	IM0081
2350	IM0198
2353	IM0271
2356	IM0342
2383	IM0239
2391	IM0202
2469	IM0240
CH36613	IM0126
CH36614	IM0126
CH36615	IM0122

TEREX	
41021-0189	IM0078
42001-0015	IM0236
42001-0016	IM0235
42001-0018	IM0237

TUBE CONTROL	
0404604	IM0388

VEHICLE SYSTEMS ENGINEERING	
A06651.0.01	IM3029

VIERECK	
4200000064	IM0044

VIMEC	
171 4092	IM3025

VOLVO	
244 306	IM0139

WARN	
21131	IM0147
MRJ-2056	IM0147

WEBASTO	
9003895C	IM3011
9003895D	IM3011

WESTERN MOTORS	
46-4058	IM0222
46-4210	IM0043
AMJ-5197	IM0039
AMJ-5238	IM0028
W-3589	IM0216
W-5393	IM0016
W-5643	IM0186
W-5659	IM0030
W-5670	IM0051
W-5680	IM0033
W-6001	IM0159
W-6212	IM0159
W-7608	IM0146
W-7656	IM0043
W-7859	IM0030
W-7864	IM0028
W-7880	IM0033
W-7925	IM0146
W-8032B	IM0214
W-8032B	IM0164
W-8036	IM0156
W-8037	IM0249
W-8044	IM0127
W-8047	IM0127
W-8051	IM0315
W-8055	IM0172

WESTERN MOTORS	
W-8735	IM0132
W-8775	IM0036
W-8921	IM0147
W-8935	IM0159
W-8935-BC	IM0159
W-8961	IM0007
W-8963	IM0138
W-8963B	IM0137
W-8987	IM0208
W-8989	IM0208
W-9007	IM0159
W-9035	IM0159
W-9063	IM0138
W-9787	IM0167
W-9787	IM0208
W-9789	IM0208
W-9792	IM0165
W-9793	IM0166
W-9795	IM0185
W-9988	IM0208

ZEPRO	
21218	IM0011
21241	IM0054
21242	IM0055

ZF MARINE	
3324354006	IM3038
3327311048	IM3043
3327311081	IM3043
3329355015	IM3044
3329355033	IM3044
501329375	IM3042

ZF-GOTHA	
0501214960	IM0088
0501321067	IM0206
393988-RS150003-24V	IM0087
407565-RA150006-24V	IM0091
488001-RS150015-24V	IM0088

EN	OE part numbers - Aftermarket part numbers
DE	E.A.-Bestellnummer - Handelsbestellnummer
FR	Référence 1 ere mont – Référence rechange
IT	Codice I. impianto - Codice II. impianto

Letrika

IM0001	11.212.066	AMJ5632 12V 2,1kW
IM0002	11.212.067	AMJ5633 24V 2,1kW
IM0003	11.212.085	AMJ5649 12V 1,5kW
	11.212.069	AMJ5635 12V 1,5kW
	11.212.057	AMJ5625 12V 1,5kW
IM0004	11.212.086	AMJ5650 24V 2,0kW
	11.212.056	AMJ5624 24V 2,0kW
IM0005	11.212.089	AMJ5653 12V 1,5kW
	11.212.071	AMJ5637 12V 1,5kW
IM0006	11.212.090	AMJ5654 24V 2,0kW
	11.212.074	AMJ5640 24V 2,0kW
IM0007	11.212.106	AMJ4603 24V 1,9kW
IM0008	11.212.169	AMJ5690 24V 2,1kW
IM0009	11.212.188	AMK5615 24V 3,0kW
IM0010	11.212.229	AMJ5518 24V 2,0kW
IM0011	11.212.306	AMK5633 24V 3,0kW
IM0012	11.212.309	AMJ5552 12V 2,1kW
IM0013	11.212.331	AMJ5560 24V 2,0kW
IM0014	11.212.332	AMK5637 24V 3,0kW
IM0015	11.212.335	AMJ5561 12V 1,5kW
IM0016	11.212.393	AMK5639 24V 3,0kW
	11.212.215	AMK5622 24V 3,0kW
IM0017	11.212.423	AMP4625 24V 3,0kW
IM0018	11.212.491	AMJ5131 12V 1,5kW
	11.212.118	AMJ5673 12V 1,5kW
IM0019	11.212.492	AMJ5132 24V 2,0kW
	11.212.119	AMJ5674 24V 2,0kW
IM0020	11.212.524	AMJ5114 24V 2,1kW
	11.212.415	AMJ5590 24V 2,1kW
	11.212.258	AMJ5532 24V 2,1kW
IM0021	11.212.560	AMJ5127 24V 2,0kW
	11.216.882	AMJ5858 24V 2,2kW
	11.212.255	AMJ5529 24V 2,0kW
	11.212.216	AMJ5512 24V 2,0kW
IM0022	11.212.570	AMJ5133 48V 2,0kW
	11.212.136	AMJ5683 48V 2,0kW
IM0023	11.212.591	AMK3303 72V 1,0kW
	11.212.146	AMK3301 72V 1,0kW
IM0024	11.212.598	AMF4633 12V 1,2kW
	11.212.440	AMF4613 12V 1,2kW
IM0025	11.212.599	AMF4634 24V 1,2kW
	11.212.456	AMF4615 24V 1,2kW
IM0026	11.212.600	AMJ5145 24V 2,1kW
	11.214.016	AMJ5152 24V 2,1kW
	11.214.015	AMJ5153 24V 2,1kW
	11.212.461	AMJ5595 24V 2,1kW
IM0027	11.212.603	AMG1609 12V 0,5kW
IM0028	11.212.864	AMJ5238 12V 1,6kW
	11.212.611	AMJ5177 12V 1,6kW
	11.212.087	AMJ5651 12V 1,5kW
	11.212.068	AMJ5634 12V 1,5kW
IM0029	11.212.865	AMJ5239 24V 2,2kW
	11.216.541	AMJ5781 24V 2,2kW
	11.212.612	AMJ5178 24V 2,2kW
	11.212.088	AMJ5652 24V 2,0kW
	11.212.070	AMJ5636 24V 2,0kW
IM0030	11.212.619	AMJ4662 24V 2,2kW
	11.216.730	AMJ4554 24V 2,2kW
	11.212.546	AMJ4648 24V 2,2kW
	11.212.419	AMJ4632 24V 2,0kW
IM0031	11.212.621	AMJ4663 12V 1,6kW
	11.212.545	AMJ4647 12V 1,6kW
IM0032	11.212.622	AMJ4664 12V 1,6kW
	11.216.729	AMJ4553 12V 1,6kW
	11.212.553	AMJ4649 12V 1,6kW
IM0033	11.212.623	AMJ5182 12V 1,6kW
	11.216.753	AMJ5825 12V 1,6kW
	11.216.361	AMJ5747 12V 1,6kW
	11.212.554	AMJ5121 12V 1,6kW
IM0034	11.212.624	AMJ5183 24V 2,2kW
	11.216.752	AMJ5824 24V 2,2kW
	11.216.360	AMJ5746 24V 2,2kW
IM0035	11.212.628	AMJ5221 24V 2,1kW
IM0036	11.212.633	AMJ5222 12V 1,6kW
	11.216.881	AMJ5857 12V 1,6kW
	11.212.232	AMJ5520 12V 1,5kW
IM0037	11.212.635	AMK5668 24V 3,0kW
IM0038	11.212.736	AMJ5196 24V 2,2kW
IM0039	11.212.737	AMJ5197 12V 1,6kW
IM0040	11.212.771	AMP2601 24V 2,0kW
IM0041	11.212.792	AMJ5226 12V 2,1kW
	11.212.414	AMJ5589 12V 2,1kW
	11.212.257	AMJ5531 12V 2,1kW
IM0042	11.212.797	AMJ4689 12V 1,5kW
IM0043	11.212.798	AMJ4690 24V 2,0kW

IM0044	11.212.829	AMK5682 24V 3,0kW
	11.212.398	AMK5642 24V 3,0kW
IM0045	11.212.843	AMK5684 24V 3,0kW
	11.216.431	AMK5528 24V 3,0kW
	11.212.618	AMK5666 24V 3,0kW
IM0046	11.212.854	AMK5685 24V 3,0kW
IM0047	11.212.855	AMJ5233 24V 2,0kW
IM0048	11.212.918	AMJ4708 24V 2,2kW
IM0049	11.212.928	AMP2607 24V 2,1kW
IM0050	11.212.935	AMJ5265 12V 1,6kW
	11.212.112	AMJ5669 12V 1,5kW
	11.212.082	AMJ5646 12V 1,5kW
	11.212.075	AMJ5641 12V 1,5kW
IM0051	11.212.936	AMJ5266 24V 2,2kW
	11.212.113	AMJ5670 24V 2,0kW
	11.212.083	AMJ5647 24V2,0kW
	11.212.076	AMJ5642 24V 2,0kW
IM0052	11.212.948	AMP2609 24V 2,0kW
IM0053	11.212.950	AMP2610 24V 3,0kW
IM0054	11.212.957	AMJ5272 12V 1,6kW
	11.212.416	AMJ5591 12V 1,5kW
IM0055	11.212.958	AMJ5273 24V 2,2kW
	11.212.417	AMJ5592 24V 2,0kW
IM0056	11.212.964	AMP2611 24V 1,5kW
IM0057	11.212.987	AMJ5279 24V 2,2kW
	11.212.770	AMJ5217 24V 2,0kW
IM0058	11.212.989	AME1542 12V 0,5kW
IM0063	11.214.107	AMK4605 24V 0,7kW
IM0064	11.214.200	AMP4320 24V 2,1kW
IM0065	11.214.210	AMP5610 24V 5,5kW
	11.214.440	AMP5612 24V 5,5kW
IM0068	11.214.232	AMP4659 24V 2,5kW
	11.214.448	AMP4686 24V 2,5kW
IM0069	11.214.233	AMP4660 24V 3,0kW
	11.214.446	AMP4685 24V 3,0kW
IM0070	11.214.235	AMP4640 24V 1,1kW
IM0072	11.214.240	AMP4664 24V 2,5kW
	11.214.444	AMP4684 24V 2,5kW
IM0073	11.214.242	AMP4663 24V 2,0kW
IM0074	11.214.252	AMP5303 48V 0,3kW
IM0075	11.214.253	AMP5609 72V 0,2kW
IM0076	11.214.254	AMP4643 24V 4,1kW
	11.214.438	AMP4679 24V 4,1kW
IM0077	11.214.255	AMP4632 24V 3,0kW
	11.214.434	AMP4676 24V 3,0kW
	11.212.301	AMP4610 24V 3,0kW
IM0078	11.214.257	AMP4633 48V 3,7kW
	11.214.436	AMP4677 48V 3,7kW
IM0079	11.214.258	AMP4634 80V 3,0kW
	11.214.441	AMP4681 80V 3,0kW
IM0080	11.214.259	AMP4635 80V 3,0kW
	11.214.442	AMP4682 80V 3,0kW
IM0081	11.214.260	AMP4636 24V 1,1kW
IM0082	11.214.261	AMP4311 24V 1,0kW
IM0083	11.214.262	AMP4666 24V 2,0kW
IM0084	11.214.269	AMP4661 24V 3,0kW
	11.214.437	AMP4678 24V 3,0kW
IM0085	11.214.270	AMP4646 48V 4,3kW
IM0087	11.214.272	AMP4648 24V 1,1kW
IM0088	11.214.273	AMP4316 24V 2,1kW
IM0090	11.214.275	AMP4649 24V 1,5kW
IM0091	11.214.276	AMP4650 24V 2,6kW
IM0092	11.214.277	AMP4651 24V 2,0kW
IM0093	11.214.282	AMP4652 24V 1,6kW
IM0094	11.214.283	AMP4312 24V 1,0kW
IM0095	11.214.284	AMP4654 24V 2,0kW
IM0096	11.214.285	AMP4655 24V 1,1kW
IM0097	11.214.287	AMP4656 24V 1,1kW
IM0099	11.214.289	AMP4657 48V 3,7kW
	11.214.439	AMP4680 48V 3,7kW
IM0100	11.214.291	AMP4668 24V 1,5kW
IM0101	11.214.292	AMP4662 24V 1,6kW
IM0103	11.214.295	AMP4667 24V 1,6kW
IM0104	11.214.297	AMP4318 24V 1,0kW
IM0107	11.214.408	AMT5603 48V 4,0kW
IM0108	11.214.409	AMT4630 72V 5,0kW
IM0111	11.216.004	AMP4512 36V 4,1kW
	11.212.298	AMP4609 36V 5,0kW
IM0112	11.216.049	AMJ4725 24V 2,0kW
IM0113	11.216.050	AMJ4726 12V 1,5kW
IM0114	11.216.051	AMJ4727 24V 0,9kW
IM0115	11.216.052	AMJ4728 12V 0,7kW
IM0116	11.216.067	AME1560 24V 0,5kW
IM0117	11.216.077	AMJ5701 12V 1,6kW
	11.212.684	AMJ5189 12V 1,5kW

IM0118	11.216.105	AMK5503 24V 3,0kW
IM0119	11.216.117	AMJ5705 12V 1,6kW
	11.216.840	AMJ5845 12V 1,6kW
	11.212.609	AMJ5175 12V 1,6kW
	11.212.107	AMJ5666 12V 1,5kW
IM0120	11.216.129	AMG1635 24V 1,2kW
IM0121	11.216.171	AME1588 12V 0,5kW
	11.212.198	AME1628 12V 0,5kW
IM0122	11.216.172	AME1589 24V 0,5kW
	11.212.199	AME1629 24V 0,5kW
IM0123	11.216.173	AME1590 12V 0,15kW
	11.212.226	AME1630 12V 0,15kW
IM0124	11.216.177	AME1593 24V 0,8kW
	11.212.148	AME1610 24V 0,8kW
IM0125	11.216.183	AMK5509 24V 3,0kW
IM0126	11.216.190	AME1704 12V 0,8kW
	11.212.099	AME1603 12V 0,8kW
IM0127	11.216.191	AME1705 24V 0,8kW
	11.212.100	AME1604 24V 0,8kW
IM0128	11.216.192	AME1706 12V 0,8kW
	11.216.454	AME1767 12V 0,8kW
	11.212.147	AME1609 12V 0,8kW
IM0129	11.216.194	AME1708 12V 0,8kW
	11.212.196	AME1626 12V 0,8kW
IM0130	11.216.196	AME1710 24V 0,8kW
	11.212.197	AME1627 24V 0,8kW
IM0131	11.216.197	AME1711 48V 0,8kW
	11.212.273	AME1639 48V 0,8kW
IM0132	11.216.200	AMJ4747 12V 1,6kW
	11.216.874	AMJ4801 12V 1,6kW
	11.216.871	AMJ4593 12V 1,6kW
	11.216.687	AMJ4532 12V 1,6kW
	11.214.013	AMJ4658 12V 1,4kW
	11.212.721	AMJ4680 12V 1,6kW
IM0133	11.216.201	AMJ4748 12V 1,6kW
	11.216.615	AMJ4513 12V 1,6kW
	11.212.723	AMJ4682 12V 1,6kW
	11.212.719	AMJ4678 12V 1,6kW
IM0134	11.216.202	AMJ4749 12V 1,6kW
	11.212.724	AMJ4683 12V 1,6kW
IM0135	11.216.203	AMJ5716 12V 1,7kW
	11.212.750	AMJ5202 12V 1,6kW
	11.212.627	AMJ5186 12V 1,5kW
	11.212.548	AMJ5119 12V 1,5kW
	11.212.038	AMJ5608 12V 1,5kW
IM0136	11.216.204	AMJ5717 12V 1,6kW
	11.216.044	AMJ5290 12V 1,6kW
	11.214.054	AMJ5161 12V 1,3kW
	11.212.758	AMJ5210 12V 1,6kW
	11.212.360	AMJ5570 12V 1,5kW
	11.212.315	AMJ5556 12V 1,5kW
	11.212.233	AMJ5521 12V 1,3kW
IM0137	11.216.206	AMJ4750 24V 2,2kW
	11.214.014	AMJ4659 24V 1,7kW
	11.212.722	AMJ4681 24V 2,2kW
IM0138	11.216.207	AMJ5719 24V 2,2kW
	11.216.952	AMJ5193 24V 2,2kW
	11.212.725	AMJ5193 24V 2,2kW
IM0139	11.216.208	AMJ5720 24V 2,2kW
	11.216.022	AMJ5283 24V 2,0kW
	11.214.070	AMJ5156 24V 2,0kW
	11.214.057	AMJ5154 24V 1,5kW
	11.212.923	AMJ5254 24V 2,0kW
	11.212.748	AMJ5214 24V 2,2kW
	11.212.746	AMJ5198 24V 2,2kW
	11.212.626	AMJ5185 24V 2,0kW
	11.212.511	AMJ5107 24V 2,0kW
	11.212.276	AMJ5538 24V 2,0kW
	11.212.001	AMJ5601 24V 2,0kW
IM0140	11.216.209	AMJ5721 24V 2,2kW
	11.214.071	AMJ5157 24V 2,0kW
	11.214.058	AMJ5163 24V 1,5kW
	11.212.754	AMJ5206 24V 2,2kW
	11.212.316	AMJ5557 24V 1,5kW
	11.212.299	AMJ5549 24V 2,0kW
	11.212.034	AMJ5605 24V 2,0kW
IM0141	11.216.755	AMP4537 24V 3,0kW
	11.216.428	AMP4524 24V 3,0kW
	11.216.210	AMP4517 24V 3,0kW
	11.212.786	AMP4505 24V 3,0kW
	11.212.643	AMP4687 24V 3,0kW
IM0142	11.216.211	AMJ5723 24V 2,2kW
	11.216.045	AMJ5291 24V 2,2kW
	11.212.513	AMJ5109 24V 2,0kW
	11.212.361	AMJ5571 24V 2,0kW
	11.212.234	AMJ5522 24V 2,0kW
IM0143	11.216.224	AMJ4751 24V 1,9kW
	11.212.729	AMJ4685 24V 1,9kW
IM0144	11.216.225	AMJ5722 24V 2,1kW
	11.216.584	AMJ5791 24V 2,1kW
	11.212.731	AMJ5195 24V 2,1kW
IM0145	11.216.257	AMJ5730 24V 2,2kW
	11.216.835	AMJ5842 24V 2,2kW
	11.212.941	AMJ5269 24V 2,0kW
	11.212.610	AMJ5176 24V 2,2kW
	11.212.212	AMJ5511 24V 2,0kW
IM0146	11.216.273	AMJ4761 12V 1,6kW
	11.212.449	AMJ4635 12V 1,6kW
IM0147	11.216.274	AMJ4762 24V 2,0kW
	11.212.450	AMJ4636 24V 2,0kW
IM0148	11.216.275	AMJ4763 12V 1,5kW
	11.212.920	AMJ4709 12V 1,5kW
IM0149	11.216.276	AMJ4764 24V 2,0kW
	11.212.996	AMJ4717 24V 2,0kW
IM0151	11.216.198	AME1712 12V 0,8kW
	11.216.072	AME1562 12V 0,8kW
IM0152	11.216.199	AME1713 24V 0,8kW
	11.216.073	AME1563 24V 0,8kW
IM0153	11.216.366	AME1745 12V 0,5kW
IM0154	11.216.367	AME1746 24V 0,5kW
IM0155	11.216.338	AME1736 12V 0,5kW
	11.216.179	AME1595 12V 0,5kW
IM0156	11.216.339	AME1737 24V 0,5kW
	11.216.180	AME1596 24V 0,5kW
IM0157	11.216.340	AME1738 24V 0,8kW
	11.216.181	AME1597 24V 0,8kW
IM0158	11.216.028	AMK5695 12V 2,4kW
IM0159	11.212.108	AMJ5667 12V 2,1kW
IM0160	11.216.245	AMP5614 80V 1,0kW
	11.212.154	AMP3301 80V 1,0kW
IM0161	11.216.205	AMJ5718 24V 2,2kW
	11.216.233	AMJ5725 24V 2,2kW
	11.216.021	AMJ5282 24V 2,0kW
	11.212.922	AMJ5253 24V 2,0kW
	11.212.905	AMJ5249 24V 2,2kW
	11.212.537	AMJ5115 24V 2,2kW
	11.212.358	AMJ5568 24V 2,0kW
	11.212.355	AMJ5565 24V 2,0kW
	11.212.084	AMJ5648 24V 2,0kW
IM0162	11.212.559	AMJ5126 24V 2,1kW
	11.212.934	AMJ5264 24V 2,0kW
IM0163	11.216.380	AMJ5753 24V 2,2kW
	11.216.254	AMJ5729 24V 2,2kW
	11.216.061	AMJ5296 24V 2,2kW
IM0164	11.216.237	AME1719 12V 0,8kW
	11.216.815	AME1133 12V 0,8kW
	11.212.995	AME1545 12V 0,8kW
	11.212.629	AME1688 12V 0,8kW
	11.212.562	AME1683 12V 0,8kW
IM0165	11.216.385	AMJ5754 24V 2,05kW
	11.212.387	AMJ5582 24V 2,0kW
IM0166	11.216.386	AMJ5755 24V 1,8kW
	11.212.580	AMJ4655 24V 2,2kW
	11.212.388	AMJ5583 24V 1,8kW
IM0167	11.216.383	AMJ4783 12V 1,6kW
	11.212.648	AMJ4666 12V 1,6kW
IM0168	11.216.384	AMJ4784 24V 0,6kW
	11.216.114	AMJ4741 24V 0,6kW
IM0169	11.216.122	AMK5504 24V 3,0kW
IM0170	11.212.993	AMK5690 24V 3,0kW
IM0171	11.212.516	AMJ5110 12V 1,5kW
IM0172	11.216.238	AME1720 12V 0,8kW
	11.212.334	AME1643 12V 0,8kW
	11.212.159	AME1614 12V 0,8kW
IM0173	11.216.394	AMJ5756 12V 1,5kW
IM0174	11.216.395	AMJ5757 24V 2,0kW
IM0175	11.216.193	AME1707 12V 0,8kW
	11.212.194	AME1624 12V 0,8kW
IM0176	11.216.240	AME1722 12V 0,8kW
	11.212.630	AME1689 12V 0,8kW
IM0177	11.216.241	AME1723 24V 0,8kW
	11.212.631	AME1690 24V 0,8kW
IM0178	11.216.402	AMJ4789 12V 0,7kW
	11.212.831	AMJ4696 12V 0,7kW
IM0179	11.216.403	AMJ4790 24V 0,9kW
	11.212.832	AMJ4697 24V 0,9kW
IM0180	11.216.404	AMT4659 48V 11,5kW
	11.216.053	AMT4647 48V 11,5kW
	11.212.903	AMT4642 48V 11,5kW
IM0181	11.216.319	AMK5519 24V 3,0kW

Letrika

	11.212.400	AMK5644 24V 3,0kW
IM0182	11.216.195	AME1709 24V 0,8kW
	11.212.195	AME1625 24V 0,8kW
IM0183	11.216.910	AMJ5865 12V 2,1kW
	11.216.134	AMJ5708 12V 2,1kW
IM0184	11.212.138	AMK5607 24V 3,0kW
	11.216.937	AMK5567 24V 3,0kW
IM0185	11.212.385	AMJ5580 12V 1,4kW
IM0186	11.212.596	AMJ5143 12V 1,5kW
IM0187	11.216.023	AMJ5284 48V 2,0kW
IM0188	11.216.024	AMJ5285 12V 1,5kW
	11.212.925	AMJ5256 12V 1,5kW
IM0189	11.216.025	AMJ5286 48V 2,0kW
IM0190	11.216.026	AMJ5287 24V 2,0kW
IM0191	11.216.056	AME1557 24V 0,5kW
IM0192	11.216.104	AME1567 12V 0,15kW
IM0193	11.216.909	AMJ5864 24V 2,1kW
	11.216.133	AMJ5707 24V 2,1kW
IM0194	11.216.234	AME1716 24V 0,8kW
	11.216.175	AME1592 24V 0,8kW
IM0195	11.216.235	AME1717 12V 0,8kW
	11.216.174	AME1591 12V 0,8kW
	11.212.486	AME1670 12V 0,8kW
IM0196	11.216.236	AME1718 12V 0,8kW
	11.216.153	AME1577 12V 0,8kW
	11.212.164	AME1616 12V 0,8kW
IM0197	11.216.239	AME1721 24V 0,8kW
	11.216.154	AME1578 24V 0,8kW
	11.212.182	AME1623 24V 0,8kW
IM0198	11.216.369	AMK2614 24V 0,9kW
IM0200	11.216.401	AMJ4788 24V 2,2kW
IM0201	11.216.266	AME1727 48V 0,8kW
IM0202	11.216.449	AMK2622 24V 0,9kW
IM0203	11.216.445	AMJ5766 12V 1,6kW
IM0204	11.216.446	AMJ5767 24V 2,2kW
IM0205	11.214.299	AMP4509 24V 3,0kW
IM0206	11.214.279	AMP4508 24V 2,6kW
IM0207	11.216.359	AMJ5748 24V 2,2kW
IM0208	11.212.386	AMJ5581 12V 1,9kW
IM0209	11.216.463	AME1769 12V 0,8kW
	11.216.159	AME1583 12V 0,8kW
	11.216.157	AME1581 24V 0,5kW
	11.212.231	AME1631 12V 0,8kW
	11.212.156	AME1613 12V 0,5kW
IM0210	11.216.464	AME1770 24V 0,8kW
	11.216.160	AME1584 24V 0,8kW
	11.212.152	AME1612 24V 0,8kW
IM0211	11.216.470	AME1772 24V 0,5kW
	11.216.155	AME1579 24V 0,5kW
	11.212.168	AME1619 24V 0,5kW
IM0212	11.216.489	AME1777 12V 0,5kW
	11.212.691	AME1699 12V 0,5kW
IM0213	11.216.490	AME1778 12V 0,35kW
	11.212.960	AME1534 12V 0,35kW
IM0214	11.216.491	AME1779 12V 0,8kW
	11.216.832	AME1741 12V 0,8kW
	11.216.352	AME1741 12V 0,8kW
IM0216	11.216.493	AMF4665 12V 1,2kW
	11.216.397	AMF4662 12V 1,2kW
IM0218	11.212.228	AMJ5517 12V 1,5kW
IM0219	11.216.496	AMJ4501 12V 2,1kW
	11.212.710	AMJ4672 12V 2,1kW
IM0220	11.216.497	AMJ4502 12V 1,6kW
	11.212.877	AMJ4705 12V 1,6kW
IM0221	11.216.498	AMJ5775 12V 2,1kW
	11.216.054	AMJ5293 12V 2,1kW
IM0222	11.216.499	AMJ4503 12V 1,6kW
	11.216.728	AMJ4552 12V 1,6kW
	11.216.639	AMJ4519 12V 1,6kW
	11.216.616	AMJ4514 12V 1,6kW
	11.216.284	AMJ4765 12V 1,6kW
	11.212.484	AMJ4644 12V 1,6kW
IM0223	11.216.500	AMJ4504 12V 1,5kW
	11.216.363	AMJ4779 12V 1,5kW
IM0224	11.216.501	AMJ5776 12V 2,1kW
	11.216.459	AMJ5771 12V 2,1kW
IM0225	11.216.502	AMJ4505 24V 2,1kW
	11.212.711	AMJ4673 24V 2,2kW
IM0226	11.216.503	AMJ4506 24V 2,0kW
	11.212.878	AMJ4706 24V 2,0kW
IM0227	11.216.504	AMJ4507 24V 2,0kW
	11.216.441	AMJ4794 24V 2,0kW
IM0228	11.216.505	AMK4657 12V 1,6kW
	11.216.424	AMK4652 12V 1,6kW
IM0229	11.216.506	AMK4656 24V 2,0kW

	11.216.425	AMK4653 24V 2,0kW
IM0230	11.216.507	AMK5532 48V 3,0kW
	11.212.581	AMK5662 48V 3,0kW
IM0231	11.216.508	AMK5533 48V 3,0kW
	11.212.640	AMK5670 48V 3,0kW
IM0232	11.216.511	AMJ5777 48V 2,0kW
IM0233	11.216.327	AMJ4778 24V 2,0kW
IM0234	11.216.510	AMT4664 36V 6,9kW
	11.216.436	AMT4660 36V 6,9kW
	11.216.101	AMT4649 36V 6,9kW
IM0235	11.212.851	AMP2602 48V 1,0kW
IM0236	11.212.883	AMT2603 48V 4,0kW
IM0237	11.216.015	AMT2607 48V 4,0kW
IM0238	11.216.518	AMJ5779 24V 2,1kW
IM0239	11.216.413	AMK2620 24V 1,5kW
IM0240	11.216.521	AMK2623 24V 1,5kW
IM0241	11.216.514	AMK5534 24V 3,0kW
IM0243	11.216.526	AME1784 24V 0,5kW
IM0244	11.216.447	AMJ5768 24V 2,1kW
IM0245	11.216.455	AMJ5769 12V 1,6kW
IM0246	11.216.456	AMJ5770 24V 2,2kW
IM0247	11.216.265	AME1726 12V 0,5kW
	11.212.636	AME1692 12V 0,5kW
IM0248	11.216.486	AMK5531 24V 3,0kW
IM0249	11.216.547	AME1795 24V 0,5kW
	11.216.189	AME1703 24V 0,5kW
IM0250	11.216.426	AMK5527 24V 3,0kW
	11.216.804	AMK5557 24V 3,0kW
IM0251	11.216.146	AMK4638 24V 3,0kW
IM0252	11.216.516	AMJ5778 24V 2,1kW
IM0253	11.216.577	AMK5543 24V 3,0kW
IM0254	11.216.560	AMJ5784 12V 1,6kW
IM0255	11.212.557	AMJ5124 12V 1,5kW
IM0256	11.216.555	AMP4526 24V 3,0kW
IM0257	11.216.539	AMK5539 24V 3,0kW
IM0258	11.216.572	AMJ5787 24V 2,0kW
IM0259	11.216.573	AMJ5788 12V 1,5kW
IM0260	11.216.574	AMJ5789 24V 2,2kW
	11.216.678	AMJ5817 24V 2,2kW
IM0261	11.216.575	AMJ5790 12V 1,6kW
	11.216.681	AMJ5819 12V 1,6kW
IM0263	11.216.587	AMK5544 24V 3,0kW
IM0264	11.216.481	AMF5606 12V 1,2kW
	11.216.621	AMF5615 12V 1,2kW
IM0265	11.216.591	AMP4529 80V 3,0kW
IM0266	11.216.534	AMP4525 24V 2,0kW
IM0267	11.216.533	AMP4321 24V 1,0kW
IM0268	11.216.622	AME1109 24V 0,5kW
IM0269	11.216.623	AMJ5798 24V 2,2kW
IM0270	11.216.633	AMJ5803 24V 2,2kW
	11.216.079	AMJ5702 24V 2,2kW
IM0271	11.216.375	AMK2615 24V 0,9kW
IM0272	11.216.594	AMP4530 48V 3,7kW
IM0273	11.216.596	AMP4531 24V 4,1kW
IM0274	11.216.601	AMG1647 12V 0,4kW
IM0275	11.216.644	AMJ4522 12V 1,6kW
IM0277	11.216.624	AMK5549 24V 3,0kW
IM0278	11.216.589	AMK4661 24V 3,0kW
IM0279	11.216.658	AMJ5811 24V 2,2kW
	11.216.479	AMJ5772 24V 2,2kW
IM0280	11.216.676	AMJ5815 12V 1,6kW
IM0281	11.216.664	AMK2630 24V 1,0kW
	11.216.350	AMK2611 24V 1,0kW
IM0282	11.216.663	AMK2629 24V 1,5kW
	11.216.356	AMK2613 24V 1,5kW
IM0283	11.216.677	AMJ5816 24V 2,2kW
IM0284	11.216.130	AMK4635 24V 3,0kW
	11.216.957	AMK4626 24V 3,0kW
	11.216.011	AMK4626 24V 3,0kW
	11.212.822	AMK4622 24V 3,0kW
IM0285	11.216.708	AMJ5822 12V 1,6kW
	11.216.410	AMJ5761 12V 1,6kW
IM0286	11.212.116	AMK5601 24V 3,0kW
IM0287	11.216.703	AMJ4542 12V 1,5kW
IM0288	11.216.702	AMJ4541 24V 2,0kW
IM0289	11.216.700	AMJ4540 24V 2,0kW
IM0290	11.216.699	AMJ4539 12V 1,5kW
IM0291	11.216.213	AMG1636 12V 0,5kW
IM0292	11.216.228	AMG1640 24V 0,2kW
IM0293	11.216.263	AMG1641 24V 0,2kW
IM0295	11.216.679	AMJ4526 24V 2,0kW
IM0296	11.216.734	AME1121 12V 0,8kW
IM0297	11.216.727	AME1120 24V 0,8kW
IM0298	11.216.680	AMJ5818 24V 1,4kW
	11.216.829	AMJ5840 24V 1,4kW

Letrika

IM0299	11.216.723	AMJ4548 12V 1,5kW
IM0300	11.216.724	AMJ4549 24V 2,0kW
IM0301	11.216.617	AMT2627 48V 4,5kW
IM0303	11.216.754	AMP5617 24V 5,5kW
IM0304	11.216.785	AMJ4575 12V 1,6kW
	11.216.953	AMJ4520 12V 1,6kW
	11.216.640	AMJ4520 12V 1,6kW
IM0305	11.216.784	AMJ4574 12V 1,6kW
	11.216.956	AMJ4818 12V 1,6kW
	11.216.598	AMJ4510 12V 1,6kW
IM0306	11.216.783	AMJ4573 12V 1,6kW
	11.216.951	AMJ4799 12V 1,6kW
	11.216.484	AMJ4799 12V 1,6kW
IM0307	11.216.773	AMJ4572 12V 0,7kW
IM0308	11.216.772	AMJ4571 24V 0,9kW
IM0309	11.216.781	AMK4678 24V 3,0kW
	11.216.958	AMK4651 24V 3,0kW
	11.216.417	AMK4651 24V 3,0kW
IM0310	11.216.788	AMK4679 24V 3,0kW
	11.216.959	AMK4666 24V 3,0kW
	11.216.667	AMK4666 24V 3,0kW
IM0311	11.216.786	AME1124 24V 0,8kW
	11.216.950	AME1113 24V 0,8kW
	11.216.650	AME1113 24V 0,8kW
IM0312	11.216.787	AMJ5833 48V 2,2kW
	11.216.654	AMJ5809 48V 2,2kW
IM0313	11.216.789	AMJ4576 12V 1,6kW
	11.216.088	AMJ4735 12V 1,6kW
IM0314	11.216.797	AME1127 12V 0,8kW
	11.216.178	AME1594 12V 0,8kW
IM0315	11.216.796	AME1126 24V 0,8kW
	11.216.182	AME1598 24V 0,8kW
IM0316	11.216.790	AMJ4577 12V 1,6kW
	11.216.301	AMJ4769 12V 1,6kW
IM0317	11.216.795	AME1125 24V 0,8kW
	11.216.540	AME1790 24V 0,8kW
IM0318	11.216.794	AME1128 12V 0,8kW
	11.216.593	AME1105 12V 0,8kW
IM0319	11.216.793	AMJ5834 48V 2,2kW
	11.216.635	AMJ5804 48V 2,2kW
IM0320	11.216.791	AMJ4578 12V 1,6kW
	11.216.636	AMJ4518 12V 1,6kW
IM0321	11.216.792	AMJ4579 24V 2,2kW
	11.216.646	AMJ4523 24V 2,2kW
IM0322	11.216.776	AMK5554 24V 3,0kW
IM0323	11.216.389	AME1749 12V 0,5kW
IM0324	11.216.823	AMP5618 24V 5,5kW
IM0325	11.216.812	AME1132 24V 0,8kW
IM0326	11.216.841	AMF4684 12V 1,2kW
IM0327	11.216.842	AMF4685 24V 1,2kW
IM0328	11.216.317	AMJ5734 48V 2,0kW
IM0329	11.212.895	AMJ5244 24V 2,1kW
IM0330	11.212.896	AMJ4707 12V 1,6kW
IM0331	11.212.286	AMJ5545 48V 2,0kW
IM0332	11.212.808	AMP4507 48V 1,0kW
IM0333	11.216.217	AMT2610 48V 4,5kW
IM0334	11.216.865	AMK5562 24V 3,0kW
	11.216.016	AMK5694 24V 3,0kW
	11.212.838	AMK5683 24V 3,0kW
IM0335	11.216.811	AMJ4582 24V 2,2kW
IM0336	11.216.877	AMJ4803 24V 1,5kW
IM0337	11.216.107	AME1569 12V 0,8kW
IM0338	11.216.876	AMJ4802 12V 1,6kW
IM0341	11.216.883	AMJ5859 24V 2,2kW
IM0342	11.216.376	AMK2616 24V 0,9kW
IM0350	11.216.422	AMJ5763 24V 2,2kW
	11.216.857	AMJ5847 24V 2,2kW
IM0352	11.216.902	AMJ5862 12V 1,6kW
	11.216.608	AMJ5796 12V 1,6kW
IM0353	11.216.904	AMJ5863 24V 2,2kW
	11.216.009	AMJ5281 24V 2,2kW
IM0355	11.216.719	AMK4673 24V 3,0kW
IM0356	11.216.831	AMK4684 24V 1,5kW
IM0357	11.216.552	AMK5542 24V 3,0kW
IM0358	11.216.918	AMK2635 24V 3,0kW
	11.216.645	AMK2627 24V 3,0kW
IM0359	11.216.917	AMJ4811 24V 2,2kW
	11.216.551	AMJ4509 24V 1,9kW
IM0360	11.216.915	AMP4539 48V 3,7kW
IM0361	11.216.914	AMJ 5866 24V 2,2kW
	11.216.164	AMJ5714 24V 2,2kW
IM0362	11.216.911	AME1149 12V 0,8kW
IM0363	11.216.912	AME1150 24V 0,8kW
IM0364	11.216.925	AMJ5868 24V 2,2kW
	11.216.066	AMJ5297 24V 2,2kW

IM0365	11.216.919	AMK5563 24V 3,0kW
IM0366	11.212.892	AMK5687 12V 2,4kW
IM0367	11.214.296	AMP4669 24V 2,1kW
IM0368	11.216.903	AMJ4810 24V 2,2kW
	11.216.747	AMJ4773 24V 2,2kW
	11.216.305	AMJ4773 24V 2,2kW
IM0369	11.216.111	AMT4650 24V 8,8kW
IM0372	11.216.878	AMJ 5856 24V 2,2kW
IM0373	11.216.807	AMF4682 24V 0,9kW
IM0374	11.216.808	AMF4683 12V 0,9kW
IM0375	11.216.684	AME1116 12V 0,8kW
IM0376	11.216.685	AME1117 24V 0,8kW
IM0378	11.216.135	AMK5505 24V 3,0kW
IM0379	11.216.108	AME1570 24V 0,8kW
IM0380	11.216.924	AMK4691 24V 3,0kW
IM0381	11.216.923	AMK5565 24V 3,0kW
IM0382	11.212.974	AMK5688 48V 3,0kW
IM0385	11.216.267	AMK5513 24V 3,0kW
IM0386	11.216.432	AME1759 12V 0,5kW
IM0387	11.212.356	AMJ5566 12V 1,5kW
	11.212.132	AMJ5681 12V 1,5kW
IM0388	11.216.879	AMK 4690 24V 4,0kW
IM0390	11.216.769	AMK2632 24V 1,5kW
IM0392	11.216.961	AMJ5878 12V 1,5kW
	11.216.368	AMJ5750 12V 1,5kW
IM3002	11.213.225	AMG6368 48V 0,8kW
	11.213.040	AMG6315 48V 0,8kW
	11.213.022	AMG6304 48V 0,8kW
	11.213.011	AMG6301 48V 0,8kW
IM3003	11.213.226	AMG6369 48V 0,8kW
	11.213.041	AMG6316 48V 0,8kW
IM3005	11.213.203	AMK6120 24V 1,0kW
IM3006	11.213.223	AMK6126 48V 1,0kW
	11.213.209	AMK6124 48V 1,0kW
IM3011	11.213.186	AMK6119 24V 1,0kW
	11.213.042	AMK6105 24V 1,0kW
IM3016	11.213.227	AML6307 80V 2,0kW
	11.213.060	AML6301 80V 2,0kW
IM3018	11.213.218	AMG6367 80V 0,8kW
IM3019	11.213.232	AMK6129 80V 1,2kW
	11.213.070	AMK6106 80V 1,2kW
IM3020	11.213.224	AMK6127 24V 1,0kW
	11.213.078	AMK6107 24V 1,0kW
IM3022	11.213.228	AMG6370 80V 0,4kW
	11.213.092	AMG6332 80V 0,4kW
IM3023	11.213.229	AMK6335 80V 1,2kW
	11.213.095	AMK6319 80V 1,2kW
IM3025	11.213.098	AMG6334 24V 0,4kW
IM3026	11.213.106	AMK6109 24V 1,0kW
IM3028	11.213.231	AMK6128 24V 1,0kW
	11.213.109	AMK6111 24V 1,0kW
IM3029	11.213.118	AML6208 24V 2,2kW
IM3031	11.213.230	AMK6336 80V 1,2kW
	11.213.139	AMK6325 80V 1,2kW
	11.213.027	AMK6104 80V 1,2kW
	11.213.017	AMK6301 80V 1,2kW
IM3034	11.213.233	AMK6130 80V 1,2kW
	11.213.153	AMK6115 80V 1,0kW
IM3038	11.213.167	AMK6329 12V 0,8kW
	11.213.260	AMK6338 12V 0,8kW
IM3040	11.213.234	AML6308 80V 2,0kW
	11.213.177	AML6305 80V 2,0kW
IM3041	11.213.181	AMG6123 12V 0,5kW
IM3042	11.213.183	AMK6330 24V 1,0kW
IM3043	11.213.188	AMK6332 24V 1,0kW
	11.213.261	AMK6339 24V 1,0kW
IM3044	11.213.241	AMK6337 12V 0,8kW
	11.213.192	AMK6333 12V 0,8kW
IM3045	11.213.194	AMG6361 24V 0,5kW
IM3049	11.213.222	AMK6125 12V 0,7kW
IM3052	11.213.252	AMG6373 24V 0,5kW
IM7004	11.217.140	AMV7123 15V 5,0kW
	11.217.020	AMV7109 15V 5,0kW
IM7005	11.217.139	AMT7210 15V 6,5kW
	11.217.021	AMT7206 15V 6,5kW
IM7013	11.217.038	AML7107 15V 2,5kW
IM7020	11.217.070	AMV7115 30V 5,0kW
IM7024	11.217.090	AML7114 15V 1,0kW
IM7025	11.217.091	AML7115 15V 2,0kW
IM7027	11.217.094	AMT7121 30V 3,3kW
IM7031	11.217.109	AMT7126 30V 5,0kW
IM7033	11.217.113	AML7119 15V 1,5kW
IM7040	11.217.072	AMT7107 30V 1,5kW
IM7041	11.217.073	AMT7207 30V 4,0kW
IM7043	11.217.136	AMV7122 35V 15,0kW

Letrika

11.212.001	AMJ5601 24V 2,0kW	IM0139
11.212.034	AMJ5605 24V 2,0kW	IM0140
11.212.038	AMJ5608 12V 1,5kW	IM0135
11.212.056	AMJ5624 24V 2,0kW	IM0004
11.212.057	AMJ5625 12V 1,5kW	IM0003
11.212.066	AMJ5632 12V 2,1kW	IM0001
11.212.067	AMJ5633 24V 2,1kW	IM0002
11.212.068	AMJ5634 12V 1,5kW	IM0028
11.212.069	AMJ5635 12V 1,5kW	IM0003
11.212.070	AMJ5636 24V 2,0kW	IM0029
11.212.071	AMJ5637 12V 1,5kW	IM0005
11.212.074	AMJ5640 24V 2,0kW	IM0006
11.212.075	AMJ5641 12V 1,5kW	IM0050
11.212.076	AMJ5642 24V 2,0kW	IM0051
11.212.082	AMJ5646 12V 1,5kW	IM0050
11.212.083	AMJ5647 24V 2,0kW	IM0051
11.212.084	AMJ5648 24V 2,0kW	IM0161
11.212.085	AMJ5649 12V 1,5kW	IM0003
11.212.086	AMJ5650 24V 2,0kW	IM0004
11.212.087	AMJ5651 12V 1,5kW	IM0028
11.212.088	AMJ5652 24V 2,0kW	IM0029
11.212.089	AMJ5653 12V 1,5kW	IM0005
11.212.090	AMJ5654 24V 2,0kW	IM0006
11.212.099	AME1603 12V 0,8kW	IM0126
11.212.100	AME1604 24V 0,8kW	IM0127
11.212.106	AMJ4603 24V 1,9kW	IM0007
11.212.107	AMJ5666 12V 1,5kW	IM0119
11.212.108	AMJ5667 12V 2,1kW	IM0159
11.212.112	AMJ5669 12V 1,5kW	IM0050
11.212.113	AMJ5670 24V 2,0kW	IM0051
11.212.116	AMK5601 24V 3,0kW	IM0286
11.212.118	AMJ5673 12V 1,5kW	IM0018
11.212.119	AMJ5674 24V 2,0kW	IM0019
11.212.132	AMJ5681 12V 1,5kW	IM0387
11.212.136	AMJ5683 48V 2,0kW	IM0022
11.212.138	AMK5607 24V 3,0kW	IM0184
11.212.146	AMK3301 72V 1,0kW	IM0023
11.212.147	AME1609 12V 0,8kW	IM0128
11.212.148	AME1610 24V 0,8kW	IM0124
11.212.152	AME1612 24V 0,8kW	IM0210
11.212.154	AMP3301 80V 1,0kW	IM0160
11.212.156	AME1613 12V 0,5kW	IM0209
11.212.159	AME1614 12V 0,8kW	IM0172
11.212.164	AME1616 12V 0,8kW	IM0196
11.212.168	AME1619 24V 0,5kW	IM0211
11.212.169	AMJ5690 24V 2,1kW	IM0008
11.212.182	AME1623 24V 0,8kW	IM0197
11.212.188	AMK5615 24V 3,0kW	IM0009
11.212.194	AME1624 12V 0,8kW	IM0175
11.212.195	AME1625 24V 0,8kW	IM0182
11.212.196	AME1626 12V 0,8kW	IM0129
11.212.197	AME1627 24V 0,8kW	IM0130
11.212.198	AME1628 12V 0,5kW	IM0121
11.212.199	AME1629 24V 0,5kW	IM0122
11.212.212	AMJ5511 24V2,0kW	IM0145
11.212.215	AMK5622 24V 3,0kW	IM0016
11.212.216	AMJ5512 24V 2,0kW	IM0021
11.212.226	AME1630 12V 0,15kW	IM0123
11.212.228	AMJ5517 12V 1,5kW	IM0218
11.212.229	AMJ5518 24V 2,0kW	IM0010
11.212.231	AME1631 12V 0,8kW	IM0209
11.212.232	AMJ5520 12V 1,5kW	IM0036
11.212.233	AMJ5521 12V 1,3kW	IM0136
11.212.234	AMJ5522 24V 2,0kW	IM0142
11.212.255	AMJ5529 24V 2,0kW	IM0021
11.212.257	AMJ5531 12V 2,1kW	IM0041
11.212.258	AMJ5532 24V 2,1kW	IM0020
11.212.273	AME1639 48V 0,8kW	IM0131
11.212.276	AMJ5538 24V 2,0kW	IM0139
11.212.286	AMJ5545 48V 2,0kW	IM0331
11.212.298	AMP4609 36V 5,0kW	IM0111
11.212.299	AMJ5549 24V 2,0kW	IM0140
11.212.301	AMP4610 24V 3,0kW	IM0077
11.212.306	AMK5633 24V 3,0kW	IM0011
11.212.309	AMJ5552 12V 2,1kW	IM0012
11.212.315	AMJ5556 12V 1,5kW	IM0136
11.212.316	AMJ5557 24V 1,5kW	IM0140
11.212.331	AMJ5560 24V 2,0kW	IM0013
11.212.332	AMK5637 24V 3,0kW	IM0014
11.212.334	AME1643 12V 0,8kW	IM0172
11.212.335	AMJ5561 12V 1,5kW	IM0015
11.212.355	AMJ5565 24V 2,0kW	IM0161
11.212.356	AMJ5566 12V 1,5kW	IM0387
11.212.358	AMJ5568 24V 2,0kW	IM0161
11.212.360	AMJ5570 12V 1,5kW	IM0136

11.212.361	AMJ5571 24V 2,0kW	IM0142
11.212.385	AMJ5580 12V 1,4kW	IM0185
11.212.386	AMJ5581 12V 1,9kW	IM0208
11.212.387	AMJ5582 24V 2,0kW	IM0165
11.212.388	AMJ5583 24V 1,8kW	IM0166
11.212.393	AMK5639 24V 3,0kW	IM0016
11.212.398	AMK5642 24V 3,0kW	IM0044
11.212.400	AMK5644 24V 3,0kW	IM0181
11.212.414	AMJ5589 12V 2,1kW	IM0041
11.212.415	AMJ5590 24V 2,1kW	IM0020
11.212.416	AMJ5591 12V 1,5kW	IM0054
11.212.417	AMJ5592 24V 2,0kW	IM0055
11.212.419	AMJ4632 24V 2,0kW	IM0030
11.212.423	AMP4625 24V 3,0kW	IM0017
11.212.440	AMF4613 12V 1,2kW	IM0024
11.212.449	AMJ4635 12V 1,6kW	IM0146
11.212.450	AMJ4636 24V 2,0kW	IM0147
11.212.456	AMF4615 24V 1,2kW	IM0025
11.212.461	AMJ5595 24V 2,1kW	IM0026
11.212.484	AMJ4644 12V 1,6kW	IM0222
11.212.486	AME1670 12V 0,8kW	IM0195
11.212.491	AMJ5131 12V 1,5kW	IM0018
11.212.492	AMJ5132 24V 2,0kW	IM0019
11.212.511	AMJ5107 24V 2,0kW	IM0139
11.212.513	AMJ5109 24V 2,0kW	IM0142
11.212.516	AMJ5110 12V 1,5kW	IM0171
11.212.524	AMJ5114 24V 2,1kW	IM0020
11.212.537	AMJ5115 24V 2,2kW	IM0161
11.212.545	AMJ4647 12V 1,6kW	IM0031
11.212.546	AMJ4648 24V 2,2kW	IM0030
11.212.548	AMJ5119 12V 1,5kW	IM0135
11.212.553	AMJ4649 12V 1,6kW	IM0032
11.212.554	AMJ5121 12V 1,6kW	IM0033
11.212.557	AMJ5124 12V 1,5kW	IM0255
11.212.559	AMJ5126 24V 2,1kW	IM0162
11.212.560	AMJ5127 24V 2,0kW	IM0021
11.212.562	AME1683 12V 0,8kW	IM0164
11.212.570	AMJ5133 48V 2,0kW	IM0022
11.212.580	AMJ4655 24V 2,2kW	IM0166
11.212.581	AMK5662 48V 3,0kW	IM0230
11.212.591	AMK3303 72V 1,0kW	IM0023
11.212.596	AMJ5143 12V 1,5kW	IM0186
11.212.598	AMF4633 12V 1,2kW	IM0024
11.212.599	AMF4634 24V 1,2kW	IM0025
11.212.600	AMJ5145 24V 2,1kW	IM0026
11.212.603	AMG1609 12V 0,5kW	IM0027
11.212.609	AMJ5175 12V 1,6kW	IM0119
11.212.610	AMJ5176 24V 2,2kW	IM0145
11.212.611	AMJ5177 12V 1,6kW	IM0028
11.212.612	AMJ5178 24V 2,2kW	IM0029
11.212.618	AMK5666 24V 3,0kW	IM0045
11.212.619	AMJ4662 24V 2,2kW	IM0030
11.212.621	AMJ4663 12V 1,6kW	IM0031
11.212.622	AMJ4664 12V 1,6kW	IM0032
11.212.623	AMJ5182 12V 1,6kW	IM0033
11.212.624	AMJ5183 24V 2,2kW	IM0034
11.212.626	AMJ5185 24V 2,0kW	IM0139
11.212.627	AMJ5186 12V 1,5kW	IM0135
11.212.628	AMJ5221 24V 2,1kW	IM0035
11.212.629	AME1688 12V 0,8kW	IM0164
11.212.630	AME1689 12V 0,8kW	IM0176
11.212.631	AME1690 24V 0,8kW	IM0177
11.212.633	AMJ5222 12V 1,6kW	IM0036
11.212.635	AMK5668 24V 3,0kW	IM0037
11.212.636	AME1692 12V 0,5kW	IM0247
11.212.640	AMK5670 48V 3,0kW	IM0231
11.212.643	AMP4687 24V 3,0kW	IM0141
11.212.648	AMJ4666 12V 1,6kW	IM0167
11.212.684	AMJ5189 12V 1,5kW	IM0117
11.212.691	AME1699 12V 0,5kW	IM0212
11.212.710	AMJ4672 12V 2,1kW	IM0219
11.212.711	AMJ4673 24V 2,2kW	IM0225
11.212.719	AMJ4678 12V 1,6kW	IM0133
11.212.721	AMJ4680 12V 1,6kW	IM0132
11.212.722	AMJ4681 24V 2,2kW	IM0137
11.212.723	AMJ4682 12V 1,6kW	IM0133
11.212.724	AMJ4683 12V 1,6kW	IM0134
11.212.725	AMJ5193 24V 2,2kW	IM0138
11.212.729	AMJ4685 24V 1,9kW	IM0143
11.212.731	AMJ5195 24V 2,1kW	IM0144
11.212.736	AMJ5196 24V 2,2kW	IM0038
11.212.737	AMJ5197 12V 1,6kW	IM0039
11.212.746	AMJ5198 24V 2,2kW	IM0139
11.212.748	AMJ5214 24V 2,2kW	IM0139
11.212.750	AMJ5202 12V 1,6kW	IM0135

Letrika

11.212.754	AMJ5206 24V 2,2kW	IM0140
11.212.758	AMJ5210 12V 1,6kW	IM0136
11.212.770	AMJ5217 24V 2,0kW	IM0057
11.212.771	AMP2601 24V 2,0kW	IM0040
11.212.786	AMP4505 24V 3,0kW	IM0141
11.212.792	AMJ5226 12V 2,1kW	IM0041
11.212.797	AMJ4689 12V 1,5kW	IM0042
11.212.798	AMJ4690 24V 2,0kW	IM0043
11.212.808	AMP4507 48V 1,0kW	IM0332
11.212.822	AMK4622 24V 3,0kW	IM0284
11.212.829	AMK5682 24V 3,0kW	IM0044
11.212.831	AMJ4696 12V 0,7kW	IM0178
11.212.832	AMJ4697 24V 0,9kW	IM0179
11.212.838	AMK5683 24V 3,0kW	IM0334
11.212.843	AMK5684 24V 3,0kW	IM0045
11.212.851	AMP2602 48V 1,0kW	IM0235
11.212.854	AMK5685 24V 3,0kW	IM0046
11.212.855	AMJ5233 24V 2,0kW	IM0047
11.212.864	AMJ5238 12V 1,6kW	IM0028
11.212.865	AMJ5239 24V 2,2kW	IM0029
11.212.877	AMJ4705 12V 1,6kW	IM0220
11.212.878	AMJ4706 24V 2,0kW	IM0226
11.212.883	AMT2603 48V 4,0kW	IM0236
11.212.892	AMK5687 12V 2,4kW	IM0366
11.212.895	AMJ5244 24V 2,1kW	IM0329
11.212.896	AMJ4707 12V 1,6kW	IM0330
11.212.903	AMT4642 48V 11,5kW	IM0180
11.212.905	AMJ5249 24V 2,2kW	IM0161
11.212.918	AMJ4708 24V 2,2kW	IM0048
11.212.920	AMJ4709 12V 1,5kW	IM0148
11.212.922	AMJ5253 24V 2,0kW	IM0161
11.212.923	AMJ5254 24V 2,0kW	IM0139
11.212.925	AMJ5256 12V 1,5kW	IM0188
11.212.928	AMP2607 24V 2,1kW	IM0049
11.212.934	AMJ5264 24V 2,0kW	IM0162
11.212.935	AMJ5265 12V 1,6kW	IM0050
11.212.936	AMJ5266 24V 2,2kW	IM0051
11.212.941	AMJ5269 24V 2,0kW	IM0145
11.212.948	AMP2609 24V 2,0kW	IM0052
11.212.950	AMP2610 24V 3,0kW	IM0053
11.212.957	AMJ5272 12V 1,6kW	IM0054
11.212.958	AMJ5273 24V 2,2kW	IM0055
11.212.960	AME1534 12V 0,35kW	IM0213
11.212.964	AMP2611 24V 1,5kW	IM0056
11.212.974	AMK5688 48V 3,0kW	IM0382
11.212.987	AMJ5279 24V 2,2kW	IM0057
11.212.989	AME1542 12V 0,5kW	IM0058
11.212.993	AMK5690 24V 3,0kW	IM0170
11.212.995	AME1545 12V 0,8kW	IM0164
11.212.996	AMJ4717 24V 2,0kW	IM0149
11.213.011	AMG6301 48V 0,8kW	IM3002
11.213.017	AMK6301 80V 1,2kW	IM3031
11.213.022	AMG6304 48V 0,8kW	IM3002
11.213.027	AMK6104 80V 1,2kW	IM3031
11.213.040	AMG6315 48V 0,8kW	IM3002
11.213.041	AMG6316 48V 0,8kW	IM3003
11.213.042	AMK6105 24V 1,0kW	IM3011
11.213.060	AML6301 80V 2,0kW	IM3016
11.213.070	AMK6106 80V 1,2kW	IM3019
11.213.078	AMK6107 24V 1,0kW	IM3020
11.213.092	AMG6332 80V 0,4kW	IM3022
11.213.095	AMK6319 80V 1,2kW	IM3023
11.213.098	AMG6334 24V 0,4kW	IM3025
11.213.106	AMK6109 24V 1,0kW	IM3026
11.213.109	AMK6111 24V 1,0kW	IM3028
11.213.118	AML6208 24V 2,2kW	IM3029
11.213.139	AMK6325 80V 1,2kW	IM3031
11.213.153	AMK6115 80V 1,0kW	IM3034
11.213.167	AMK6329 12V 0,8kW	IM3038
11.213.177	AML6305 80V 2,0kW	IM3040
11.213.181	AMG6123 12V 0,5kW	IM3041
11.213.183	AMK6330 24V 1,0kW	IM3042
11.213.186	AMK6119 24V 1,0kW	IM3011
11.213.188	AMK6332 24V 1,0kW	IM3043
11.213.192	AMK6333 12V 0,8kW	IM3044
11.213.194	AMG6361 24V 0,5kW	IM3045
11.213.203	AMK6120 24V 1,0kW	IM3005
11.213.209	AMK6124 48V 1,0kW	IM3006
11.213.218	AMG6367 80V 0,8kW	IM3018
11.213.222	AMK612512V 0,7kW	IM3049
11.213.223	AMK6126 48V 1,0kW	IM3006
11.213.224	AMK6127 24V 1,0kW	IM3020
11.213.225	AMG6368 48V 0,8kW	IM3002
11.213.226	AMG6369 48V 0,8kW	IM3003
11.213.227	AML6307 80V 2,0kW	IM3016

11.213.228	AMG6370 80V 0,4kW	IM3022
11.213.229	AMK6335 80V 1,2kW	IM3023
11.213.230	AMK6336 80V 1,2kW	IM3031
11.213.231	AMK6128 24V 1,0kW	IM3028
11.213.232	AMK6129 80V 1,2kW	IM3019
11.213.233	AMK6130 80V 1,2kW	IM3034
11.213.234	AML6308 80V 2,0kW	IM3040
11.213.241	AMK6337 12V 0,8kW	IM3044
11.213.252	AMG6373 24V 0,5kW	IM3052
11.213.260	AMK6338 12V 0,8kW	IM3038
11.213.261	AMK6339 24V 1,0kW	IM3043
11.214.013	AMJ4658 12V 1,4kW	IM0132
11.214.014	AMJ4659 24V 1,7kW	IM0137
11.214.015	AMJ5153 24V 2,1kW	IM0026
11.214.016	AMJ5152 24V 2,1kW	IM0026
11.214.054	AMJ5161 12V 1,3kW	IM0136
11.214.057	AMJ5154 24V 1,5kW	IM0139
11.214.058	AMJ5163 24V 1,5kW	IM0140
11.214.070	AMJ5156 24V 2,0kW	IM0139
11.214.071	AMJ5157 24V 2,0kW	IM0140
11.214.107	AMK4605 24V 0,7kW	IM0063
11.214.200	AMP4320 24V 2,1kW	IM0064
11.214.210	AMP5610 24V 5,5kW	IM0065
11.214.232	AMP4659 24V 2,5kW	IM0068
11.214.233	AMP4660 24V 3,0kW	IM0069
11.214.235	AMP4640 24V 1,1kW	IM0070
11.214.240	AMP4664 24V 2,5kW	IM0072
11.214.242	AMP4663 24V 2,0kW	IM0073
11.214.252	AMP5303 48V 0,3kW	IM0074
11.214.253	AMP5609 72V 0,2kW	IM0075
11.214.254	AMP4643 24V 4,1kW	IM0076
11.214.255	AMP4632 24V 3,0kW	IM0077
11.214.257	AMP4633 48V 3,7kW	IM0078
11.214.258	AMP4634 80V 3,0kW	IM0079
11.214.259	AMP4635 80V 3,0kW	IM0080
11.214.260	AMP4636 24V 1,1kW	IM0081
11.214.261	AMP4311 24V 1,0kW	IM0082
11.214.262	AMP4666 24V 2,0kW	IM0083
11.214.269	AMP4661 24V 3,0kW	IM0084
11.214.270	AMP4646 48V 4,3kW	IM0085
11.214.272	AMP4648 24V 1,1kW	IM0087
11.214.273	AMP4316 24V 2,1kW	IM0088
11.214.275	AMP4649 24V 1,5kW	IM0090
11.214.276	AMP4650 24V 2,6kW	IM0091
11.214.277	AMP4651 24V 2,0kW	IM0092
11.214.279	AMP4508 24V 2,6kW	IM0206
11.214.282	AMP4652 24V 1,6kW	IM0093
11.214.283	AMP4312 24V 1,0kW	IM0094
11.214.284	AMP4654 24V 2,0kW	IM0095
11.214.285	AMP4655 24V 1,1kW	IM0096
11.214.287	AMP4656 24V 1,1kW	IM0097
11.214.289	AMP4657 48V 3,7kW	IM0099
11.214.291	AMP4668 24V 1,5kW	IM0100
11.214.292	AMP4662 24V 1,6kW	IM0101
11.214.295	AMP4667 24V 1,6kW	IM0103
11.214.296	AMP4669 24V 2,1kW	IM0367
11.214.297	AMP4318 24V 1,0kW	IM0104
11.214.299	AMP4509 24V 3,0kW	IM0205
11.214.408	AMT5603 48V 4,0kW	IM0107
11.214.409	AMT4630 72V 5,0kW	IM0108
11.214.434	AMP4676 24V 3,0kW	IM0077
11.214.436	AMP4677 48V 3,7kW	IM0078
11.214.437	AMP4678 24V 3,0kW	IM0084
11.214.438	AMP4679 24V 4,1kW	IM0076
11.214.439	AMP4680 48V 3,7kW	IM0099
11.214.440	AMP5612 24V 5,5kW	IM0065
11.214.441	AMP4681 80V 3,0kW	IM0079
11.214.442	AMP4682 80V 3,0kW	IM0080
11.214.444	AMP4684 24V 2,5kW	IM0072
11.214.446	AMP4685 24V 3,0kW	IM0069
11.214.448	AMP4686 24V 2,5kW	IM0068
11.216.004	AMP4512 36V 4,1kW	IM0111
11.216.009	AMJ5281 24V 2,2kW	IM0353
11.216.011	AMK4626 24V 3,0kW	IM0284
11.216.015	AMT2607 48V 4,0kW	IM0237
11.216.016	AMK5694 24V 3,0kW	IM0334
11.216.021	AMJ5282 24V 2,0kW	IM0161
11.216.022	AMJ5283 24V 2,0kW	IM0139
11.216.023	AMJ5284 48V 2,0kW	IM0187
11.216.024	AMJ5285 12V 1,5kW	IM0188
11.216.025	AMJ5286 48V 2,0kW	IM0189
11.216.026	AMJ5287 24V 2,0kW	IM0190
11.216.028	AMK5695 12V 2,4kW	IM0158
11.216.044	AMJ5290 12V 1,6kW	IM0136
11.216.045	AMJ5291 24V 2,2kW	IM0142

Letrika

Letrika

11.216.049	AMJ4725 24V 2,0kW	IM0112
11.216.050	AMJ4726 12V 1,5kW	IM0113
11.216.051	AMJ4727 24V 0,9kW	IM0114
11.216.052	AMJ4728 12V 0,7kW	IM0115
11.216.053	AMT4647 48V 11,5kW	IM0180
11.216.054	AMJ5293 12V 2,1kW	IM0221
11.216.056	AME1557 24V 0,5kW	IM0191
11.216.061	AMJ5296 24V 2,2kW	IM0163
11.216.066	AMJ5297 24V 2,2kW	IM0364
11.216.067	AME1560 24V 0,5kW	IM0116
11.216.072	AME1562 12V 0,8kW	IM0151
11.216.073	AME1563 24V 0,8kW	IM0152
11.216.077	AMJ5701 12V 1,6kW	IM0117
11.216.079	AMJ5702 24V 2,2kW	IM0270
11.216.088	AMJ4735 12V 1,6kW	IM0313
11.216.101	AMT4649 36V 6,9kW	IM0234
11.216.104	AME1567 12V 0,15kW	IM0192
11.216.105	AMK5503 24V 3,0kW	IM0118
11.216.107	AME1569 12V 0,8kW	IM0337
11.216.108	AME1570 24V 0,8kW	IM0379
11.216.111	AMT4650 24V 8,8kW	IM0369
11.216.114	AMJ4741 24V 0,6kW	IM0168
11.216.117	AMJ5705 12V 1,6kW	IM0119
11.216.122	AMK5504 24V 3,0kW	IM0169
11.216.129	AMG1635 24V 1,2kW	IM0120
11.216.130	AMK4635 24V 3,0kW	IM0284
11.216.133	AMJ5707 24V 2,1kW	IM0193
11.216.134	AMJ5708 12V 2,1kW	IM0183
11.216.135	AMK5505 24V 3,0kW	IM0378
11.216.146	AMK4638 24V 3,0kW	IM0251
11.216.153	AME1577 12V 0,8kW	IM0196
11.216.154	AME1578 24V 0,8kW	IM0197
11.216.155	AME1579 24V 0,5kW	IM0211
11.216.157	AME1581 24V 0,5kW	IM0209
11.216.159	AME1583 12V 0,8kW	IM0209
11.216.160	AME1584 24V 0,8kW	IM0210
11.216.164	AMJ5714 24V 2,2kW	IM0361
11.216.171	AME1588 12V 0,5kW	IM0121
11.216.172	AME1589 24V 0,5kW	IM0122
11.216.173	AME1590 12V 0,15kW	IM0123
11.216.174	AME1591 12V 0,8kW	IM0195
11.216.175	AME1592 24V 0,8kW	IM0194
11.216.177	AME1593 24V 0,8kW	IM0124
11.216.178	AME1594 12V 0,8kW	IM0314
11.216.179	AME1595 12V 0,5kW	IM0155
11.216.180	AME1596 24V 0,5kW	IM0156
11.216.181	AME1597 24V 0,8kW	IM0157
11.216.182	AME1598 24V 0,8kW	IM0315
11.216.183	AMK5509 24V 3,0kW	IM0125
11.216.189	AME1703 24V 0,5kW	IM0249
11.216.190	AME1704 12V 0,8kW	IM0126
11.216.191	AME1705 24V 0,8kW	IM0127
11.216.192	AME1706 12V 0,8kW	IM0128
11.216.193	AME1707 12V 0,8kW	IM0175
11.216.194	AME1708 12V 0,8kW	IM0129
11.216.195	AME1709 24V 0,8kW	IM0182
11.216.196	AME1710 24V 0,8kW	IM0130
11.216.197	AME1711 48V 0,8kW	IM0131
11.216.198	AME1712 12V 0,8kW	IM0151
11.216.199	AME1713 24V 0,8kW	IM0152
11.216.200	AMJ4747 12V 1,6kW	IM0132
11.216.201	AMJ4748 12V 1,6kW	IM0133
11.216.202	AMJ4749 12V 1,6kW	IM0134
11.216.203	AMJ5716 12V 1,7kW	IM0135
11.216.204	AMJ5717 12V 1,6kW	IM0136
11.216.205	AMJ5718 24V 2,2kW	IM0161
11.216.206	AMJ4750 24V 2,2kW	IM0137
11.216.207	AMJ5719 24V 2,2kW	IM0138
11.216.208	AMJ5720 24V 2,2kW	IM0139
11.216.209	AMJ5721 24V 2,2kW	IM0140
11.216.210	AMP4517 24V 3,0kW	IM0141
11.216.211	AMJ5723 24V 2,2kW	IM0142
11.216.213	AMG1636 12V 0,5kW	IM0291
11.216.217	AMT2610 48V 4,5kW	IM0333
11.216.224	AMJ4751 24V 1,9kW	IM0143
11.216.225	AMJ5722 24V 2,1kW	IM0144
11.216.228	AMG1640 24V 0,2kW	IM0292
11.216.233	AMJ5725 24V 2,2kW	IM0161
11.216.234	AME1716 24V 0,8kW	IM0194
11.216.235	AME1717 12V 0,8kW	IM0195
11.216.236	AME1718 12V 0,8kW	IM0196
11.216.237	AME1719 12V 0,8kW	IM0164
11.216.238	AME1720 12V 0,8kW	IM0172
11.216.239	AME1721 24V 0,8kW	IM0197
11.216.240	AME1722 12V 0,8kW	IM0176

11.216.241	AME1723 24V 0,8kW	IM0177
11.216.245	AMP5614 80V 1,0kW	IM0160
11.216.254	AMJ5729 24V 2,2kW	IM0163
11.216.257	AMJ5730 24V 2,2kW	IM0145
11.216.263	AMG1641 24V 0,2kW	IM0293
11.216.265	AME1726 12V 0,5kW	IM0247
11.216.266	AME1727 48V 0,8kW	IM0201
11.216.267	AMK5513 24V 3,0kW	IM0385
11.216.273	AMJ4761 12V 1,6kW	IM0146
11.216.274	AMJ4762 24V 2,0kW	IM0147
11.216.275	AMJ4763 12V 1,5kW	IM0148
11.216.276	AMJ4764 24V 2,0kW	IM0149
11.216.284	AMJ4765 12V 1,6kW	IM0222
11.216.301	AMJ4769 12V 1,6kW	IM0316
11.216.305	AMJ4773 24V 2,2kW	IM0368
11.216.317	AMJ5734 48V 2,0kW	IM0328
11.216.319	AMK5519 24V 3,0kW	IM0181
11.216.327	AMJ4778 24V 2,0kW	IM0233
11.216.338	AME1736 12V 0,5kW	IM0155
11.216.339	AME1737 24V 0,5kW	IM0156
11.216.340	AME1738 24V 0,8kW	IM0157
11.216.350	AMK2611 24V 1,0kW	IM0281
11.216.352	AME1741 12V 0,8kW	IM0214
11.216.356	AMK2613 24V 1,5kW	IM0282
11.216.359	AMJ5748 24V 2,2kW	IM0207
11.216.360	AMJ5746 24V 2,2kW	IM0034
11.216.361	AMJ5747 12V 1,6kW	IM0033
11.216.363	AMJ4779 12V 1,5kW	IM0223
11.216.366	AME1745 12V 0,5kW	IM0153
11.216.367	AME1746 24V 0,5kW	IM0154
11.216.368	AMJ5750 12V 1,5kW	IM0392
11.216.369	AMK2614 24V 0,9kW	IM0198
11.216.375	AMK2615 24V 0,9kW	IM0271
11.216.376	AMK2616 24V 0,9kW	IM0342
11.216.380	AMJ5753 24V 2,2kW	IM0163
11.216.383	AMJ4783 12V 1,6kW	IM0167
11.216.384	AMJ4784 24V 0,6kW	IM0168
11.216.385	AMJ5754 24V 2,05kW	IM0165
11.216.386	AMJ5755 24V 1,8kW	IM0166
11.216.389	AME1749 12V 0,5kW	IM0323
11.216.394	AMJ5756 12V 1,5kW	IM0173
11.216.395	AMJ5757 24V 2,0kW	IM0174
11.216.397	AMF4662 12V 1,2kW	IM0216
11.216.401	AMJ4788 24V 2,2kW	IM0200
11.216.402	AMJ4789 12V 0,7kW	IM0178
11.216.403	AMJ4790 24V 0,9kW	IM0179
11.216.404	AMT4659 48V 11,5kW	IM0180
11.216.410	AMJ5761 12V 1,6kW	IM0285
11.216.413	AMK2620 24V 1,5kW	IM0239
11.216.417	AMK4651 24V 3,0kW	IM0309
11.216.422	AMJ5763 24V 2,2kW	IM0350
11.216.424	AMK4652 12V 1,6kW	IM0228
11.216.425	AMK4653 24V 2,0kW	IM0229
11.216.426	AMK5527 24V 3,0kW	IM0250
11.216.428	AMP4524 24V 3,0kW	IM0141
11.216.431	AMK5528 24V 3,0kW	IM0045
11.216.432	AME1759 12V 0,5kW	IM0386
11.216.436	AMT4660 36V 6,9kW	IM0234
11.216.441	AMJ4794 24V 2,0kW	IM0227
11.216.445	AMJ5766 12V 1,6kW	IM0203
11.216.446	AMJ5767 24V 2,2kW	IM0204
11.216.447	AMJ5768 24V 2,1kW	IM0244
11.216.449	AMK2622 24V 0,9kW	IM0202
11.216.454	AME1767 12V 0,8kW	IM0128
11.216.455	AMJ5769 12V 1,6kW	IM0245
11.216.456	AMJ5770 24V 2,2kW	IM0246
11.216.459	AMJ5771 12V 2,1kW	IM0224
11.216.463	AME1769 12V 0,8kW	IM0209
11.216.464	AME1770 24V 0,8kW	IM0210
11.216.470	AME1772 24V 0,5kW	IM0211
11.216.479	AMJ5772 24V 2,2kW	IM0279
11.216.481	AMF5606 12V 1,2kW	IM0264
11.216.484	AMJ4799 12V 1,6kW	IM0306
11.216.486	AMK5531 24V 3,0kW	IM0248
11.216.489	AME1777 12V 0,5kW	IM0212
11.216.490	AME1778 12V 0,35kW	IM0213
11.216.491	AME1779 12V 0,8kW	IM0214
11.216.493	AMF4665 12V 1,2kW	IM0216
11.216.496	AMJ4501 12V 2,1kW	IM0219
11.216.497	AMJ4502 12V 1,6kW	IM0220
11.216.498	AMJ5775 12V 2,1kW	IM0221
11.216.499	AMJ4503 12V 1,6kW	IM0222
11.216.500	AMJ4504 12V 1,5kW	IM0223
11.216.501	AMJ5776 12V 2,1kW	IM0224
11.216.502	AMJ4505 24V 2,1kW	IM0225

Letrika

11.216.503	AMJ4506 24V 2,0kW	IM0226
11.216.504	AMJ4507 24V 2,0kW	IM0227
11.216.505	AMK4657 12V 1,6kW	IM0228
11.216.506	AMK4656 24V 2,0kW	IM0229
11.216.507	AMK5532 48V 3,0kW	IM0230
11.216.508	AMK5533 48V 3,0kW	IM0231
11.216.510	AMT4664 36V 6,9kW	IM0234
11.216.511	AMJ5777 48V 2,0kW	IM0232
11.216.514	AMK5534 24V 3,0kW	IM0241
11.216.516	AMJ5778 24V 2,1kW	IM0252
11.216.518	AMJ5779 24V 2,1kW	IM0238
11.216.521	AMK2623 24V 1,5kW	IM0240
11.216.526	AME1784 24V 0,5kW	IM0243
11.216.533	AMP4321 24V 1,0kW	IM0267
11.216.534	AMP4525 24V 2,0kW	IM0266
11.216.539	AMK5539 24V 3,0kW	IM0257
11.216.540	AME1790 24V 0,8kW	IM0317
11.216.541	AMJ5781 24V 2,2kW	IM0029
11.216.547	AME1795 24V 0,5kW	IM0249
11.216.551	AMJ4509 24V 1,9kW	IM0359
11.216.552	AMK5542 24V 3,0kW	IM0357
11.216.555	AMP4526 24V 3,0kW	IM0256
11.216.560	AMJ5784 12V 1,6kW	IM0254
11.216.572	AMJ5787 24V 2,0kW	IM0258
11.216.573	AMJ5788 12V 1,5kW	IM0259
11.216.574	AMJ5789 24V 2,2kW	IM0260
11.216.575	AMJ5790 12V 1,6kW	IM0261
11.216.577	AMK5543 24V 3,0kW	IM0253
11.216.584	AMJ5791 24V 2,1kW	IM0144
11.216.587	AMK5544 24V 3,0kW	IM0263
11.216.589	AMK4661 24V 3,0kW	IM0278
11.216.591	AMP4529 80V 3,0kW	IM0265
11.216.593	AME1105 12V 0,8kW	IM0318
11.216.594	AMP4530 48V 3,7kW	IM0272
11.216.596	AMP4531 24V 4,1kW	IM0273
11.216.598	AMJ4510 12V 1,6kW	IM0305
11.216.601	AMG1647 12V 0,4kW	IM0274
11.216.608	AMJ5796 12V 1,6kW	IM0352
11.216.615	AMJ4513 12V 1,6kW	IM0133
11.216.616	AMJ4514 12V 1,6kW	IM0222
11.216.617	AMT2627 48V 4,5kW	IM0301
11.216.621	AMF5615 12V 1,2kW	IM0264
11.216.622	AME1109 24V 0,5kW	IM0268
11.216.623	AMJ5798 24V 2,2kW	IM0269
11.216.624	AMK5549 24V 3,0kW	IM0277
11.216.633	AMJ5803 24V 2,2kW	IM0270
11.216.635	AMJ5804 48V 2,2kW	IM0319
11.216.636	AMJ4518 12V 1,6kW	IM0320
11.216.639	AMJ4519 12V 1,6kW	IM0222
11.216.640	AMJ4520 12V 1,6kW	IM0304
11.216.644	AMJ4522 12V 1,6kW	IM0275
11.216.645	AMK2627 24V 3,0kW	IM0358
11.216.646	AMJ4523 24V 2,2kW	IM0321
11.216.650	AME1113 24V 0,8kW	IM0311
11.216.654	AMJ5809 48V 2,2kW	IM0312
11.216.658	AMJ5811 24V 2,2kW	IM0279
11.216.663	AMK2629 24V 1,5kW	IM0282
11.216.664	AMK2630 24V 1,0kW	IM0281
11.216.667	AMK4666 24V 3,0kW	IM0310
11.216.676	AMJ5815 12V 1,6kW	IM0280
11.216.677	AMJ5816 24V 2,2kW	IM0283
11.216.678	AMJ5817 24V 2,2kW	IM0260
11.216.679	AMJ4526 24V 2,0kW	IM0295
11.216.680	AMJ5818 24V 1,4kW	IM0298
11.216.681	AMJ5819 12V 1,6kW	IM0261
11.216.684	AME1116 12V 0,8kW	IM0375
11.216.685	AME1117 24V 0,8kW	IM0376
11.216.687	AMJ4532 12V 1,6kW	IM0132
11.216.699	AMJ4539 12V 1,5kW	IM0290
11.216.700	AMJ4540 24V 2,0kW	IM0289
11.216.702	AMJ4541 24V 2,0kW	IM0288
11.216.703	AMJ4542 12V 1,5kW	IM0287
11.216.708	AMJ5822 12V 1,6kW	IM0285
11.216.719	AMK4673 24V 3,0kW	IM0355
11.216.723	AMJ4548 12V 1,5kW	IM0299
11.216.724	AMJ4549 24V 2,0kW	IM0300
11.216.727	AME1120 24V 0,8kW	IM0297
11.216.728	AMJ4552 12V 1,6kW	IM0222
11.216.729	AMJ4553 12V 1,6kW	IM0032
11.216.730	AMJ4554 24V 2,2kW	IM0030
11.216.734	AME1121 12V 0,8kW	IM0296
11.216.747	AMJ4773 24V 2,2kW	IM0368
11.216.752	AMJ5824 24V 2,2kW	IM0034
11.216.753	AMJ5825 12V 1,6kW	IM0033
11.216.754	AMP5617 24V 5,5kW	IM0303

11.216.755	AMP4537 24V 3,0kW	IM0141
11.216.769	AMK2632 24V 1,5kW	IM0390
11.216.772	AMJ4571 24V 0,9kW	IM0308
11.216.773	AMJ4572 12V 0,7kW	IM0307
11.216.776	AMK5554 24V 3,0kW	IM0322
11.216.781	AMK4678 24V 3,0kW	IM0309
11.216.783	AMJ4573 12V 1,6kW	IM0306
11.216.784	AMJ4574 12V 1,6kW	IM0305
11.216.785	AMJ4575 12V 1,6kW	IM0304
11.216.786	AME1124 24V 0,8kW	IM0311
11.216.787	AMJ5833 48V 2,2kW	IM0312
11.216.788	AMK4679 24V 3,0kW	IM0310
11.216.789	AMJ4576 12V 1,6kW	IM0313
11.216.790	AMJ4577 12V 1,6kW	IM0316
11.216.791	AMJ457812V 1,6kW	IM0320
11.216.792	AMJ4579 24V 2,2kW	IM0321
11.216.793	AMJ5834 48V 2,2kW	IM0319
11.216.794	AME1128 12V 0,8kW	IM0318
11.216.795	AME1125 24V 0,8kW	IM0317
11.216.796	AME1126 24V 0,8kW	IM0315
11.216.797	AME1127 12V 0,8kW	IM0314
11.216.804	AMK5557 24V 3,0kW	IM0250
11.216.807	AMF4682 24V 0,9kW	IM0373
11.216.808	AMF4683 12V 0,9kW	IM0374
11.216.811	AMJ4582 24V 2,2kW	IM0335
11.216.812	AME1132 24V 0,8kW	IM0325
11.216.815	AME1133 12V 0,8kW	IM0164
11.216.823	AMP5618 24V 5,5kW	IM0324
11.216.829	AMJ5840 24V 1,4kW	IM0298
11.216.831	AMK4684 24V 1,5kW	IM0356
11.216.832	AME1741 12V 0,8kW	IM0214
11.216.835	AMJ5842 24V 2,2kW	IM0145
11.216.840	AMJ5845 12V 1,6kW	IM0119
11.216.841	AMF4684 12V 1,2kW	IM0326
11.216.842	AMF4685 24V 1,2kW	IM0327
11.216.857	AMJ5847 24V 2,2kW	IM0350
11.216.865	AMK5562 24V 3,0kW	IM0334
11.216.871	AMJ4593 12V 1,6kW	IM0132
11.216.874	AMJ4801 12V 1,6kW	IM0132
11.216.876	AMJ4802 12V 1,6kW	IM0338
11.216.877	AMJ4803 24V 1,5kW	IM0336
11.216.878	AMJ 5856 24V 2,2kW	IM0372
11.216.879	AMK 4690 24V 4,0kW	IM0388
11.216.881	AMJ5857 12V 1,6kW	IM0036
11.216.882	AMJ5858 24V 2,2kW	IM0021
11.216.883	AMJ5859 24V 2,2kW	IM0341
11.216.902	AMJ5862 12V 1,6kW	IM0352
11.216.903	AMJ4810 24V 2,2kW	IM0368
11.216.904	AMJ5863 24V 2,2kW	IM0353
11.216.909	AMJ5864 24V 2,1kW	IM0193
11.216.910	AMJ5865 12V 2,1kW	IM0183
11.216.911	AME1149 12V 0,8kW	IM0362
11.216.912	AME1150 24V 0,8kW	IM0363
11.216.914	AMJ 5866 24V 2,2kW	IM0361
11.216.915	AMP4539 48V 3,7kW	IM0360
11.216.917	AMJ4811 24V 2,2kW	IM0359
11.216.918	AMK2635 24V 3,0kW	IM0358
11.216.919	AMK5563 24V 3,0kW	IM0365
11.216.923	AMK5565 24V 3,0kW	IM0381
11.216.924	AMK4691 24V 3,0kW	IM0380
11.216.925	AMJ5868 24V 2,2kW	IM0364
11.216.937	AMK5567 24V 3,0kW	IM0184
11.216.950	AME1113 24V 0,8kW	IM0311
11.216.951	AMJ4799 12V 1,6kW	IM0306
11.216.952	AMJ5193 24V 2,2kW	IM0138
11.216.953	AMJ4520 12V 1,6kW	IM0304
11.216.956	AMJ4818 12V 1,6kW	IM0305
11.216.957	AMK4626 24V 3,0kW	IM0284
11.216.958	AMK4651 24V 3,0kW	IM0309
11.216.959	AMK4666 24V 3,0kW	IM0310
11.216.961	AMJ5878 12V 1,5kW	IM0392
11.217.020	AMV7109 15V 5,0kW	IM7004
11.217.021	AMT7206 15V 6,5kW	IM7005
11.217.038	AML7107 15V 2,5kW	IM7013
11.217.070	AMV7115 30V 5,0kW	IM7020
11.217.072	AMT7107 30V 1,5kW	IM7040
11.217.073	AMT7207 30V 4,0kW	IM7041
11.217.090	AML7114 15V 1,0kW	IM7024
11.217.091	AML7115 15V 2,0kW	IM7025
11.217.094	AMT7121 30V 3,3kW	IM7027
11.217.109	AMT7126 30V 5,0kW	IM7031
11.217.113	AML7119 15V 1,5kW	IM7033
11.217.136	AMV7122 35V 15,0kW	IM7043
11.217.139	AMT7210 15V 6,5kW	IM7005
11.217.140	AMV7123 15V 5,0kW	IM7004

Letrika

AME1105	12V 0,8kW	11.216.593	IM0318
AME1109	24V 0,5kW	11.216.622	IM0268
AME1113	24V 0,8kW	11.216.950	IM0311
AME1113	24V 0,8kW	11.216.650	IM0311
AME1116	12V 0,8kW	11.216.684	IM0375
AME1117	24V 0,8kW	11.216.685	IM0376
AME1120	24V 0,8kW	11.216.727	IM0297
AME1121	12V 0,8kW	11.216.734	IM0296
AME1124	24V 0,8kW	11.216.786	IM0311
AME1125	24V 0,8kW	11.216.795	IM0317
AME1126	24V 0,8kW	11.216.796	IM0315
AME1127	12V 0,8kW	11.216.797	IM0314
AME1128	12V 0,8kW	11.216.794	IM0318
AME1132	24V 0,8kW	11.216.812	IM0325
AME1133	12V 0,8kW	11.216.815	IM0164
AME1149	12V 0,8kW	11.216.911	IM0362
AME1150	24V 0,8kW	11.216.912	IM0363
AME1534	12V 0,35kW	11.212.960	IM0213
AME1542	12V 0,5kW	11.212.989	IM0058
AME1545	12V 0,8kW	11.212.995	IM0164
AME1557	24V 0,5kW	11.216.056	IM0191
AME1560	24V 0,5kW	11.216.067	IM0116
AME1562	12V 0,8kW	11.216.072	IM0151
AME1563	24V 0,8kW	11.216.073	IM0152
AME1567	12V 0,15kW	11.216.104	IM0192
AME1569	12V 0,8kW	11.216.107	IM0337
AME1570	24V 0,8kW	11.216.108	IM0379
AME1577	12V 0,8kW	11.216.153	IM0196
AME1578	24V 0,8kW	11.216.154	IM0197
AME1579	24V 0,5kW	11.216.155	IM0211
AME1581	24V 0,5kW	11.216.157	IM0209
AME1583	12V 0,8kW	11.216.159	IM0209
AME1584	24V 0,8kW	11.216.160	IM0210
AME1588	12V 0,5kW	11.216.171	IM0121
AME1589	24V 0,5kW	11.216.172	IM0122
AME1590	12V 0,15kW	11.216.173	IM0123
AME1591	12V 0,8kW	11.216.174	IM0195
AME1592	24V 0,8kW	11.216.175	IM0194
AME1593	24V 0,8kW	11.216.177	IM0124
AME1594	12V 0,8kW	11.216.178	IM0314
AME1595	12V 0,5kW	11.216.179	IM0155
AME1596	24V 0,5kW	11.216.180	IM0156
AME1597	24V 0,8kW	11.216.181	IM0157
AME1598	24V 0,8kW	11.216.182	IM0315
AME1603	12V 0,8kW	11.212.099	IM0126
AME1604	24V 0,8kW	11.212.100	IM0127
AME1609	12V 0,8kW	11.212.147	IM0128
AME1610	24V 0,8kW	11.212.148	IM0124
AME1612	24V 0,8kW	11.212.152	IM0210
AME1613	12V 0,5kW	11.212.156	IM0209
AME1614	12V 0,8kW	11.212.159	IM0172
AME1616	12V 0,8kW	11.212.164	IM0196
AME1619	24V 0,5kW	11.212.168	IM0211
AME1623	24V 0,8kW	11.212.182	IM0197
AME1624	12V 0,8kW	11.212.194	IM0175
AME1625	24V 0,8kW	11.212.195	IM0182
AME1626	12V 0,8kW	11.212.196	IM0129
AME1627	24V 0,8kW	11.212.197	IM0130
AME1628	12V 0,5kW	11.212.198	IM0121
AME1629	24V 0,5kW	11.212.199	IM0122
AME1630	12V 0,15kW	11.212.226	IM0123
AME1631	12V 0,8kW	11.212.231	IM0209
AME1639	48V 0,8kW	11.212.273	IM0131
AME1643	12V 0,8kW	11.212.334	IM0172
AME1670	12V 0,8kW	11.212.486	IM0195
AME1683	12V 0,8kW	11.212.562	IM0164
AME1688	12V 0,8kW	11.212.629	IM0164
AME1689	12V 0,8kW	11.212.630	IM0176
AME1690	24V 0,8kW	11.212.631	IM0177
AME1692	12V 0,5kW	11.212.636	IM0247
AME1699	12V 0,5kW	11.212.691	IM0212
AME1703	24V 0,5kW	11.216.189	IM0249
AME1704	12V 0,8kW	11.216.190	IM0126
AME1705	24V 0,8kW	11.216.191	IM0127
AME1706	12V 0,8kW	11.216.192	IM0128
AME1707	12V 0,8kW	11.216.193	IM0175
AME1708	12V 0,8kW	11.216.194	IM0129
AME1709	24V 0,8kW	11.216.195	IM0182
AME1710	24V 0,8kW	11.216.196	IM0130
AME1711	48V 0,8kW	11.216.197	IM0131
AME1712	12V 0,8kW	11.216.198	IM0151
AME1713	24V 0,8kW	11.216.199	IM0152
AME1716	24V 0,8kW	11.216.234	IM0194
AME1717	12V 0,8kW	11.216.235	IM0195
AME1718	12V 0,8kW	11.216.236	IM0196

AME1719	12V 0,8kW	11.216.237	IM0164
AME1720	12V 0,8kW	11.216.238	IM0172
AME1721	24V 0,8kW	11.216.239	IM0197
AME1722	12V 0,8kW	11.216.240	IM0176
AME1723	24V 0,8kW	11.216.241	IM0177
AME1726	12V 0,5kW	11.216.265	IM0247
AME1727	48V 0,8kW	11.216.266	IM0201
AME1736	12V 0,5kW	11.216.338	IM0155
AME1737	24V 0,5kW	11.216.339	IM0156
AME1738	24V 0,8kW	11.216.340	IM0157
AME1741	12V 0,8kW	11.216.832	IM0214
AME1741	12V 0,8kW	11.216.352	IM0214
AME1745	12V 0,5kW	11.216.366	IM0153
AME1746	24V 0,5kW	11.216.367	IM0154
AME1749	12V 0,5kW	11.216.389	IM0323
AME1759	12V 0,5kW	11.216.432	IM0386
AME1767	12V 0,8kW	11.216.454	IM0128
AME1769	12V 0,8kW	11.216.463	IM0209
AME1770	24V 0,8kW	11.216.464	IM0210
AME1772	24V 0,5kW	11.216.470	IM0211
AME1777	12V 0,5kW	11.216.489	IM0212
AME1778	12V 0,35kW	11.216.490	IM0213
AME1779	12V 0,8kW	11.216.491	IM0214
AME1784	24V 0,5kW	11.216.526	IM0243
AME1790	24V 0,8kW	11.216.540	IM0317
AME1795	24V 0,5kW	11.216.547	IM0249
AMF4613	12V 1,2kW	11.212.440	IM0024
AMF4615	24V 1,2kW	11.212.456	IM0025
AMF4633	12V 1,2kW	11.212.598	IM0024
AMF4634	24V 1,2kW	11.212.599	IM0025
AMF4662	12V 1,2kW	11.216.397	IM0216
AMF4665	12V 1,2kW	11.216.493	IM0216
AMF4682	24V 0,9kW	11.216.807	IM0373
AMF4683	12V 0,9kW	11.216.808	IM0374
AMF4684	12V 1,2kW	11.216.841	IM0326
AMF4685	24V 1,2kW	11.216.842	IM0327
AMF5606	12V 1,2kW	11.216.481	IM0264
AMF5615	12V 1,2kW	11.216.621	IM0264
AMG1609	12V 0,5kW	11.212.603	IM0027
AMG1635	24V 1,2kW	11.216.129	IM0120
AMG1636	12V 0,5kW	11.216.213	IM0291
AMG1640	24V 0,2kW	11.216.228	IM0292
AMG1641	24V 0,2kW	11.216.263	IM0293
AMG1647	12V 0,4kW	11.216.601	IM0274
AMG6123	12V 0,5kW	11.213.181	IM3041
AMG6301	48V 0,8kW	11.213.011	IM3002
AMG6304	48V 0,8kW	11.213.022	IM3002
AMG6315	48V 0,8kW	11.213.040	IM3002
AMG6316	48V 0,8kW	11.213.041	IM3003
AMG6332	80V 0,4kW	11.213.092	IM3022
AMG6334	24V 0,4kW	11.213.098	IM3025
AMG6361	24V 0,5kW	11.213.194	IM3045
AMG6367	80V 0,8kW	11.213.218	IM3018
AMG6368	48V 0,8kW	11.213.225	IM3002
AMG6369	48V 0,8kW	11.213.226	IM3003
AMG6370	80V 0,4kW	11.213.228	IM3022
AMG6373	24V 0,5kW	11.213.252	IM3052
AMJ 5856	24V 2,2kW	11.216.878	IM0372
AMJ 5866	24V 2,2kW	11.216.914	IM0361
AMJ4501	12V 2,1kW	11.216.496	IM0219
AMJ4502	12V 1,6kW	11.216.497	IM0220
AMJ4503	12V 1,6kW	11.216.499	IM0222
AMJ4504	12V 1,5kW	11.216.500	IM0223
AMJ4505	24V 2,1kW	11.216.502	IM0225
AMJ4506	24V 2,0kW	11.216.503	IM0226
AMJ4507	24V 2,0kW	11.216.504	IM0227
AMJ4509	24V 1,9kW	11.216.551	IM0359
AMJ4510	12V 1,6kW	11.216.598	IM0305
AMJ4513	12V 1,6kW	11.216.615	IM0133
AMJ4514	12V 1,6kW	11.216.616	IM0222
AMJ4518	12V 1,6kW	11.216.636	IM0320
AMJ4519	12V 1,6kW	11.216.639	IM0222
AMJ4520	12V 1,6kW	11.216.640	IM0304
AMJ4520	12V 1,6kW	11.216.953	IM0304
AMJ4522	12V 1,6kW	11.216.644	IM0275
AMJ4523	24V 2,2kW	11.216.646	IM0321
AMJ4526	24V 2,0kW	11.216.679	IM0295
AMJ4532	12V 1,6kW	11.216.687	IM0132
AMJ4539	12V 1,5kW	11.216.699	IM0290
AMJ4540	24V 2,0kW	11.216.700	IM0289
AMJ4541	24V 2,0kW	11.216.702	IM0288
AMJ4542	12V 1,5kW	11.216.703	IM0287
AMJ4548	12V 1,5kW	11.216.723	IM0299
AMJ4549	24V 2,0kW	11.216.724	IM0300
AMJ4552	12V 1,6kW	11.216.728	IM0222

Letrika

AMJ4553	12V 1,6kW	11.216.729	IM0032
AMJ4554	24V 2,2kW	11.216.730	IM0030
AMJ4571	24V 0,9kW	11.216.772	IM0308
AMJ4572	12V 0,7kW	11.216.773	IM0307
AMJ4573	12V 1,6kW	11.216.783	IM0306
AMJ4574	12V 1,6kW	11.216.784	IM0305
AMJ4575	12V 1,6kW	11.216.785	IM0304
AMJ4576	12V 1,6kW	11.216.789	IM0313
AMJ4577	12V 1,6kW	11.216.790	IM0316
AMJ4578	12V 1,6kW	11.216.791	IM0320
AMJ4579	24V 2,2kW	11.216.792	IM0321
AMJ4582	24V 2,2kW	11.216.811	IM0335
AMJ4593	12V 1,6kW	11.216.871	IM0132
AMJ4603	24V 1,9kW	11.212.106	IM0007
AMJ4632	24V 2,0kW	11.212.419	IM0030
AMJ4635	12V 1,6kW	11.212.449	IM0146
AMJ4636	24V 2,0kW	11.212.450	IM0147
AMJ4644	12V 1,6kW	11.212.484	IM0222
AMJ4647	12V 1,6kW	11.212.545	IM0031
AMJ4648	24V 2,2kW	11.212.546	IM0030
AMJ4649	12V 1,6kW	11.212.553	IM0032
AMJ4655	24V 2,2kW	11.212.580	IM0166
AMJ4658	12V 1,4kW	11.214.013	IM0132
AMJ4659	24V 1,7kW	11.214.014	IM0137
AMJ4662	24V 2,2kW	11.212.619	IM0030
AMJ4663	12V 1,6kW	11.212.621	IM0031
AMJ4664	12V 1,6kW	11.212.622	IM0032
AMJ4666	12V 1,6kW	11.212.648	IM0167
AMJ4672	12V 2,1kW	11.212.710	IM0219
AMJ4673	24V 2,2kW	11.212.711	IM0225
AMJ4678	12V 1,6kW	11.212.719	IM0133
AMJ4680	12V 1,6kW	11.212.721	IM0132
AMJ4681	24V 2,2kW	11.212.722	IM0137
AMJ4682	12V 1,6kW	11.212.723	IM0133
AMJ4683	12V 1,6kW	11.212.724	IM0134
AMJ4685	24V 1,9kW	11.212.729	IM0143
AMJ4689	12V 1,5kW	11.212.797	IM0042
AMJ4690	24V 2,0kW	11.212.798	IM0043
AMJ4696	12V 0,7kW	11.212.831	IM0178
AMJ4697	24V 0,9kW	11.212.832	IM0179
AMJ4705	12V 1,6kW	11.212.877	IM0220
AMJ4706	24V 2,0kW	11.212.878	IM0226
AMJ4707	12V 1,6kW	11.212.896	IM0330
AMJ4708	24V2,2kW	11.212.918	IM0048
AMJ4709	12V 1,5kW	11.212.920	IM0148
AMJ4717	24V 2,0kW	11.212.996	IM0149
AMJ4725	24V 2,0kW	11.216.049	IM0112
AMJ4726	12V 1,5kW	11.216.050	IM0113
AMJ4727	24V 0,9kW	11.216.051	IM0114
AMJ4728	12V 0,7kW	11.216.052	IM0115
AMJ4735	12V 1,6kW	11.216.088	IM0313
AMJ4741	24V 0,6kW	11.216.114	IM0168
AMJ4747	12V 1,6kW	11.216.200	IM0132
AMJ4748	12V 1,6kW	11.216.201	IM0133
AMJ4749	12V 1,6kW	11.216.202	IM0134
AMJ4750	24V 2,2kW	11.216.206	IM0137
AMJ4751	24V 1,9kW	11.216.224	IM0143
AMJ4761	12V 1,6kW	11.216.273	IM0146
AMJ4762	24V 2,0kW	11.216.274	IM0147
AMJ4763	12V 1,5kW	11.216.275	IM0148
AMJ4764	24V 2,0kW	11.216.276	IM0149
AMJ4765	12V 1,6kW	11.216.284	IM0222
AMJ4769	12V 1,6kW	11.216.301	IM0316
AMJ4773	24V 2,2kW	11.216.305	IM0368
AMJ4773	24V 2,2kW	11.216.747	IM0368
AMJ4778	24V 2,0kW	11.216.327	IM0233
AMJ4779	12V 1,5kW	11.216.363	IM0223
AMJ4783	12V 1,6kW	11.216.383	IM0167
AMJ4784	24V 0,6kW	11.216.384	IM0168
AMJ4788	24V 2,2kW	11.216.401	IM0200
AMJ4789	12V 0,7kW	11.216.402	IM0178
AMJ4790	24V 0,9kW	11.216.403	IM0179
AMJ4794	24V 2,0kW	11.216.441	IM0227
AMJ4799	12V 1,6kW	11.216.951	IM0306
AMJ4799	12V 1,6kW	11.216.484	IM0306
AMJ4801	12V 1,6kW	11.216.874	IM0132
AMJ4802	12V 1,6kW	11.216.876	IM0338
AMJ4803	24V 1,5kW	11.216.877	IM0336
AMJ4810	24V 2,2kW	11.216.903	IM0368
AMJ4811	24V 2,2kW	11.216.917	IM0359
AMJ4818	12V 1,6kW	11.216.956	IM0305
AMJ5107	24V 2,0kW	11.212.511	IM0139
AMJ5109	24V 2,0kW	11.212.513	IM0142
AMJ5110	12V 1,5kW	11.212.516	IM0171
AMJ5114	24V 2,1kW	11.212.524	IM0020

AMJ5115	24V 2,2kW	11.212.537	IM0161
AMJ5119	12V 1,5kW	11.212.548	IM0135
AMJ5121	12V 1,6kW	11.212.554	IM0033
AMJ5124	12V 1,5kW	11.212.557	IM0255
AMJ5126	24V 2,1kW	11.212.559	IM0162
AMJ5127	24V 2,0kW	11.212.560	IM0021
AMJ5131	12V 1,5kW	11.212.491	IM0018
AMJ5132	24V 2,0kW	11.212.492	IM0019
AMJ5133	48V 2,0kW	11.212.570	IM0022
AMJ5143	12V 1,5kW	11.212.596	IM0186
AMJ5145	24V 2,1kW	11.212.600	IM0026
AMJ5152	24V 2,1kW	11.214.016	IM0026
AMJ5153	24V 2,1kW	11.214.015	IM0026
AMJ5154	24V 1,5kW	11.214.057	IM0139
AMJ5156	24V 2,0kW	11.214.070	IM0139
AMJ5157	24V 2,0kW	11.214.071	IM0140
AMJ5161	12V 1,3kW	11.214.054	IM0136
AMJ5163	24V 1,5kW	11.214.058	IM0140
AMJ5175	12V 1,6kW	11.212.609	IM0119
AMJ5176	24V 2,2kW	11.212.610	IM0145
AMJ5177	12V 1,6kW	11.212.611	IM0028
AMJ5178	24V 2,2kW	11.212.612	IM0029
AMJ5182	12V 1,6kW	11.212.623	IM0033
AMJ5183	24V 2,2kW	11.212.624	IM0034
AMJ5185	24V 2,0kW	11.212.626	IM0139
AMJ5186	12V 1,5kW	11.212.627	IM0135
AMJ5189	12V 1,5kW	11.212.684	IM0117
AMJ5193	24V 2,2kW	11.216.952	IM0138
AMJ5193	24V 2,2kW	11.212.725	IM0138
AMJ5195	24V 2,1kW	11.212.731	IM0144
AMJ5196	24V 2,2kW	11.212.736	IM0038
AMJ5197	12V 1,6kW	11.212.737	IM0039
AMJ5198	24V 2,2kW	11.212.746	IM0139
AMJ5202	12V 1,6kW	11.212.750	IM0135
AMJ5206	24V 2,2kW	11.212.754	IM0140
AMJ5210	12V 1,6kW	11.212.758	IM0136
AMJ5214	24V 2,2kW	11.212.748	IM0139
AMJ5217	24V 2,0kW	11.212.770	IM0057
AMJ5221	24V 2,1kW	11.212.628	IM0035
AMJ5222	12V 1,6kW	11.212.633	IM0036
AMJ5226	12V 2,1kW	11.212.792	IM0041
AMJ5233	24V 2,0kW	11.212.855	IM0047
AMJ5238	12V 1,6kW	11.212.864	IM0028
AMJ5239	24V 2,2kW	11.212.865	IM0029
AMJ5244	24V 2,1kW	11.212.895	IM0329
AMJ5249	24V 2,2kW	11.212.905	IM0161
AMJ5253	24V 2,0kW	11.212.922	IM0161
AMJ5254	24V 2,0kW	11.212.923	IM0139
AMJ5256	12V 1,5kW	11.212.925	IM0188
AMJ5264	24V 2,0kW	11.212.934	IM0162
AMJ5265	12V 1,6kW	11.212.935	IM0050
AMJ5266	24V 2,2kW	11.212.936	IM0051
AMJ5269	24V 2,0kW	11.212.941	IM0145
AMJ5272	12V 1,6kW	11.212.957	IM0054
AMJ5273	24V 2,2kW	11.212.958	IM0055
AMJ5279	24V 2,2kW	11.212.987	IM0057
AMJ5281	24V 2,2kW	11.216.009	IM0353
AMJ5282	24V 2,0kW	11.216.021	IM0161
AMJ5283	24V 2,0kW	11.216.022	IM0139
AMJ5284	48V 2,0kW	11.216.023	IM0187
AMJ5285	12V 1,5kW	11.216.024	IM0188
AMJ5286	48V 2,0kW	11.216.025	IM0189
AMJ5287	24V 2,0kW	11.216.026	IM0190
AMJ5290	12V 1,6kW	11.216.044	IM0136
AMJ5291	24V 2,2kW	11.216.045	IM0142
AMJ5293	12V 2,1kW	11.216.054	IM0221
AMJ5296	24V 2,2kW	11.216.061	IM0163
AMJ5297	24V 2,2kW	11.216.066	IM0364
AMJ5511	24V 2,0kW	11.212.212	IM0145
AMJ5512	24V 2,0kW	11.212.216	IM0021
AMJ5517	12V 1,5kW	11.212.228	IM0218
AMJ5518	24V 2,0kW	11.212.229	IM0010
AMJ5520	12V 1,5kW	11.212.232	IM0036
AMJ5521	12V 1,3kW	11.212.233	IM0136
AMJ5522	24V 2,0kW	11.212.234	IM0142
AMJ5529	24V 2,0kW	11.212.255	IM0021
AMJ5531	12V 2,1kW	11.212.257	IM0041
AMJ5532	24V 2,1kW	11.212.258	IM0020
AMJ5538	24V 2,0kW	11.212.276	IM0139
AMJ5545	48V 2,0kW	11.212.286	IM0331
AMJ5549	24V 2,0kW	11.212.299	IM0140
AMJ5552	12V 2,1kW	11.212.309	IM0012
AMJ5556	12V 1,5kW	11.212.315	IM0136
AMJ5557	24V 1,5kW	11.212.316	IM0140
AMJ5560	24V 2,0kW	11.212.331	IM0013

Letrika

AMJ5561	12V 1,5kW	11.212.335	IM0015
AMJ5565	24V 2,0kW	11.212.355	IM0161
AMJ5566	12V 1,5kW	11.212.356	IM0387
AMJ5568	24V 2,0kW	11.212.358	IM0161
AMJ5570	12V 1,5kW	11.212.360	IM0136
AMJ5571	24V 2,0kW	11.212.361	IM0142
AMJ5580	12V 1,4kW	11.212.385	IM0185
AMJ5581	12V 1,9kW	11.212.386	IM0208
AMJ5582	24V 2,0kW	11.212.387	IM0165
AMJ5583	24V 1,8kW	11.212.388	IM0166
AMJ5589	12V 2,1kW	11.212.414	IM0041
AMJ5590	24V 2,1kW	11.212.415	IM0020
AMJ5591	12V 1,5kW	11.212.416	IM0054
AMJ5592	24V 2,0kW	11.212.417	IM0055
AMJ5595	24V 2,1kW	11.212.461	IM0026
AMJ5601	24V 2,0kW	11.212.001	IM0139
AMJ5605	24V 2,0kW	11.212.034	IM0140
AMJ5608	12V 1,5kW	11.212.038	IM0135
AMJ5624	24V 2,0kW	11.212.056	IM0004
AMJ5625	12V 1,5kW	11.212.057	IM0003
AMJ5632	12V 2,1kW	11.212.066	IM0001
AMJ5633	24V 2,1kW	11.212.067	IM0002
AMJ5634	12V 1,5kW	11.212.068	IM0028
AMJ5635	12V 1,5kW	11.212.069	IM0003
AMJ5636	24V 2,0kW	11.212.070	IM0029
AMJ5637	12V 1,5kW	11.212.071	IM0005
AMJ5640	24V 2,0kW	11.212.074	IM0006
AMJ5641	12V 1,5kW	11.212.075	IM0050
AMJ5642	24V 2,0kW	11.212.076	IM0051
AMJ5646	12V 1,5kW	11.212.082	IM0050
AMJ5647	24V 2,0kW	11.212.083	IM0051
AMJ5648	24V 2,0kW	11.212.084	IM0161
AMJ5649	12V 1,5kW	11.212.085	IM0003
AMJ5650	24V 2,0kW	11.212.086	IM0004
AMJ5651	12V 1,5kW	11.212.087	IM0028
AMJ5652	24V 2,0kW	11.212.088	IM0029
AMJ5653	12V 1,5kW	11.212.089	IM0005
AMJ5654	24V 2,0kW	11.212.090	IM0006
AMJ5666	12V 1,5kW	11.212.107	IM0119
AMJ5667	12V 2,1kW	11.212.108	IM0159
AMJ5669	12V 1,5kW	11.212.112	IM0050
AMJ5670	24V 2,0kW	11.212.113	IM0051
AMJ5673	12V 1,5kW	11.212.118	IM0018
AMJ5674	24V 2,0kW	11.212.119	IM0019
AMJ5681	12V 1,5kW	11.212.132	IM0387
AMJ5683	48V 2,0kW	11.212.136	IM0022
AMJ5690	24V 2,1kW	11.212.169	IM0008
AMJ5701	12V 1,6kW	11.216.077	IM0117
AMJ5702	24V 2,2kW	11.216.079	IM0270
AMJ5705	12V 1,6kW	11.216.117	IM0119
AMJ5707	24V 2,1kW	11.216.133	IM0193
AMJ5708	12V 2,1kW	11.216.134	IM0183
AMJ5714	24V 2,2kW	11.216.164	IM0361
AMJ5716	12V 1,7kW	11.216.203	IM0135
AMJ5717	12V 1,6kW	11.216.204	IM0136
AMJ5718	24V 2,2kW	11.216.205	IM0161
AMJ5719	24V 2,2kW	11.216.207	IM0138
AMJ5720	24V 2,2kW	11.216.208	IM0139
AMJ5721	24V 2,2kW	11.216.209	IM0140
AMJ5722	24V 2,1kW	11.216.225	IM0144
AMJ5723	24V 2,2kW	11.216.211	IM0142
AMJ5725	24V 2,2kW	11.216.233	IM0161
AMJ5729	24V 2,2kW	11.216.254	IM0163
AMJ5730	24V 2,2kW	11.216.257	IM0145
AMJ5734	48V 2,0kW	11.216.317	IM0328
AMJ5746	24V 2,2kW	11.216.360	IM0034
AMJ5747	12V 1,6kW	11.216.361	IM0033
AMJ5748	24V 2,2kW	11.216.359	IM0207
AMJ5750	12V 1,5kW	11.216.368	IM0392
AMJ5753	24V 2,2kW	11.216.380	IM0163
AMJ5754	24V 2,05kW	11.216.385	IM0165
AMJ5755	24V 1,8kW	11.216.386	IM0166
AMJ5756	12V 1,5kW	11.216.394	IM0173
AMJ5757	24V 2,0kW	11.216.395	IM0174
AMJ5761	12V 1,6kW	11.216.410	IM0285
AMJ5763	24V 2,2kW	11.216.422	IM0350
AMJ5766	12V 1,6kW	11.216.445	IM0203
AMJ5767	24V 2,2kW	11.216.446	IM0204
AMJ5768	24V 2,1kW	11.216.447	IM0244
AMJ5769	12V 1,6kW	11.216.455	IM0245
AMJ5770	24V 2,2kW	11.216.456	IM0246
AMJ5771	12V 2,1kW	11.216.459	IM0224
AMJ5772	24V 2,2kW	11.216.479	IM0279
AMJ5775	12V 2,1kW	11.216.498	IM0221
AMJ5776	12V 2,1kW	11.216.501	IM0224

AMJ5777	48V 2,0kW	11.216.511	IM0232
AMJ5778	24V 2,1kW	11.216.516	IM0252
AMJ5779	24V 2,1kW	11.216.518	IM0238
AMJ5781	24V 2,2kW	11.216.541	IM0029
AMJ5784	12V 1,6kW	11.216.560	IM0254
AMJ5787	24V 2,0kW	11.216.572	IM0258
AMJ5788	12V 1,5kW	11.216.573	IM0259
AMJ5789	24V 2,2kW	11.216.574	IM0260
AMJ5790	12V 1,6kW	11.216.575	IM0261
AMJ5791	24V 2,1kW	11.216.584	IM0144
AMJ5796	12V 1,6kW	11.216.608	IM0352
AMJ5798	24V 2,2kW	11.216.623	IM0269
AMJ5803	24V 2,2kW	11.216.633	IM0270
AMJ5804	48V 2,2kW	11.216.635	IM0319
AMJ5809	48V 2,2kW	11.216.654	IM0312
AMJ5811	24V 2,2kW	11.216.658	IM0279
AMJ5815	12V 1,6kW	11.216.676	IM0280
AMJ5816	24V 2,2kW	11.216.677	IM0283
AMJ5817	24V 2,2kW	11.216.678	IM0260
AMJ5818	24V 1,4kW	11.216.680	IM0298
AMJ5819	12V 1,6kW	11.216.681	IM0261
AMJ5822	12V 1,6kW	11.216.708	IM0285
AMJ5824	24V 2,2kW	11.216.752	IM0034
AMJ5825	12V 1,6kW	11.216.753	IM0033
AMJ5833	48V 2,2kW	11.216.787	IM0312
AMJ5834	48V 2,2kW	11.216.793	IM0319
AMJ5840	24V 1,4kW	11.216.829	IM0298
AMJ5842	24V 2,2kW	11.216.835	IM0145
AMJ5845	12V 1,6kW	11.216.840	IM0119
AMJ5847	24V 2,2kW	11.216.857	IM0350
AMJ5857	12V 1,6kW	11.216.881	IM0036
AMJ5858	24V 2,2kW	11.216.882	IM0021
AMJ5859	24V 2,2kW	11.216.883	IM0341
AMJ5862	12V 1,6kW	11.216.902	IM0352
AMJ5863	24V 2,2kW	11.216.904	IM0353
AMJ5864	24V 2,1kW	11.216.909	IM0193
AMJ5865	12V 2,1kW	11.216.910	IM0183
AMJ5868	24V 2,2kW	11.216.925	IM0364
AMJ5878	12V 1,5kW	11.216.961	IM0392
AMK 4690	24V 4,0kW	11.216.879	IM0388
AMK2611	24V 1,0kW	11.216.350	IM0281
AMK2613	24V 1,5kW	11.216.356	IM0282
AMK2614	24V 0,9kW	11.216.369	IM0198
AMK2615	24V 0,9kW	11.216.375	IM0271
AMK2616	24V 0,9kW	11.216.376	IM0342
AMK2620	24V 1,5kW	11.216.413	IM0239
AMK2622	24V 0,9kW	11.216.449	IM0202
AMK2623	24V 1,5kW	11.216.521	IM0240
AMK2627	24V 3,0kW	11.216.645	IM0358
AMK2629	24V 1,5kW	11.216.663	IM0282
AMK2630	24V 1,0kW	11.216.664	IM0281
AMK2632	24V 1,5kW	11.216.769	IM0390
AMK2635	24V 3,0kW	11.216.918	IM0358
AMK3301	72V 1,0kW	11.212.146	IM0023
AMK3303	72V 1,0kW	11.212.591	IM0023
AMK4605	24V 0,7kW	11.214.107	IM0063
AMK4622	24V 3,0kW	11.212.822	IM0284
AMK4626	24V 3,0kW	11.216.957	IM0284
AMK4626	24V 3,0kW	11.216.011	IM0284
AMK4635	24V 3,0kW	11.216.130	IM0284
AMK4638	24V 3,0kW	11.216.146	IM0251
AMK4651	24V 3,0kW	11.216.958	IM0309
AMK4651	24V 3,0kW	11.216.417	IM0309
AMK4652	12V 1,6kW	11.216.424	IM0228
AMK4653	24V 2,0kW	11.216.425	IM0229
AMK4656	24V 2,0kW	11.216.506	IM0229
AMK4657	12V 1,6kW	11.216.505	IM0228
AMK4661	24V 3,0kW	11.216.589	IM0278
AMK4666	24V 3,0kW	11.216.959	IM0310
AMK4666	24V 3,0kW	11.216.667	IM0310
AMK4673	24V 3,0kW	11.216.719	IM0355
AMK4678	24V 3,0kW	11.216.781	IM0309
AMK4679	24V 3,0kW	11.216.788	IM0310
AMK4684	24V 1,5kW	11.216.831	IM0356
AMK4691	24V 3,0kW	11.216.924	IM0380
AMK5503	24V 3,0kW	11.216.105	IM0118
AMK5504	24V 3,0kW	11.216.122	IM0169
AMK5505	24V 3,0kW	11.216.135	IM0378
AMK5509	24V 3,0kW	11.216.183	IM0125
AMK5513	24V 3,0kW	11.216.267	IM0385
AMK5519	24V 3,0kW	11.216.319	IM0181
AMK5527	24V 3,0kW	11.216.426	IM0250
AMK5528	24V 3,0kW	11.216.431	IM0045
AMK5531	24V 3,0kW	11.216.486	IM0248
AMK5532	48V 3,0kW	11.216.507	IM0230

Letrika

AMK5533	48V 3,0kW	11.216.508	IM0231
AMK5534	24V 3,0kW	11.216.514	IM0241
AMK5539	24V 3,0kW	11.216.539	IM0257
AMK5542	24V 3,0kW	11.216.552	IM0357
AMK5543	24V 3,0kW	11.216.577	IM0253
AMK5544	24V 3,0kW	11.216.587	IM0263
AMK5549	24V 3,0kW	11.216.624	IM0277
AMK5554	24V 3,0kW	11.216.776	IM0322
AMK5557	24V 3,0kW	11.216.804	IM0250
AMK5562	24V 3,0kW	11.216.865	IM0334
AMK5563	24V 3,0kW	11.216.919	IM0365
AMK5565	24V 3,0kW	11.216.923	IM0381
AMK5567	24V 3,0kW	11.216.937	IM0184
AMK5601	24V 3,0kW	11.212.116	IM0286
AMK5607	24V 3,0kW	11.212.138	IM0184
AMK5615	24V 3,0kW	11.212.188	IM0009
AMK5622	24V 3,0kW	11.212.215	IM0016
AMK5633	24V 3,0kW	11.212.306	IM0011
AMK5637	24V 3,0kW	11.212.332	IM0014
AMK5639	24V 3,0kW	11.212.393	IM0016
AMK5642	24V 3,0kW	11.212.398	IM0044
AMK5644	24V 3,0kW	11.212.400	IM0181
AMK5662	48V 3,0kW	11.212.581	IM0230
AMK5666	24V 3,0kW	11.212.618	IM0045
AMK5668	24V 3,0kW	11.212.635	IM0037
AMK5670	48V 3,0kW	11.212.640	IM0231
AMK5682	24V 3,0kW	11.212.829	IM0044
AMK5683	24V 3,0kW	11.212.838	IM0334
AMK5684	24V 3,0kW	11.212.843	IM0045
AMK5685	24V 3,0kW	11.212.854	IM0046
AMK5687	12V 2,4kW	11.212.892	IM0366
AMK5688	48V 3,0kW	11.212.974	IM0382
AMK5690	24V 3,0kW	11.212.993	IM0170
AMK5694	24V 3,0kW	11.216.016	IM0334
AMK5695	12V 2,4kW	11.216.028	IM0158
AMK6104	80V 1,2kW	11.213.027	IM3031
AMK6105	24V 1,0kW	11.213.042	IM3011
AMK6106	80V 1,2kW	11.213.070	IM3019
AMK6107	24V 1,0kW	11.213.078	IM3020
AMK6109	24V 1,0kW	11.213.106	IM3026
AMK6111	24V 1,0kW	11.213.109	IM3028
AMK6115	80V 1,0kW	11.213.153	IM3034
AMK6119	24V 1,0kW	11.213.186	IM3011
AMK6120	24V 1,0kW	11.213.203	IM3005
AMK6124	48V 1,0kW	11.213.209	IM3006
AMK6125	12V 0,7kW	11.213.222	IM3049
AMK6126	48V 1,0kW	11.213.223	IM3006
AMK6127	24V 1,0kW	11.213.224	IM3020
AMK6128	24V 1,0kW	11.213.231	IM3028
AMK6129	80V 1,2kW	11.213.232	IM3019
AMK6130	80V 1,2kW	11.213.233	IM3034
AMK6301	80V 1,2kW	11.213.017	IM3031
AMK6319	80V 1,2kW	11.213.095	IM3023
AMK6325	80V 1,2kW	11.213.139	IM3031
AMK6329	12V 0,8kW	11.213.167	IM3038
AMK6330	24V 1,0kW	11.213.183	IM3042
AMK6332	24V 1,0kW	11.213.188	IM3043
AMK6333	12V 0,8kW	11.213.192	IM3044
AMK6335	80V 1,2kW	11.213.229	IM3023
AMK6336	80V 1,2kW	11.213.230	IM3031
AMK6337	12V 0,8kW	11.213.241	IM3044
AMK6338	12V 0,8kW	11.213.260	IM3038
AMK6339	24V 1,0kW	11.213.261	IM3043
AML6208	24V 2,2kW	11.213.118	IM3029
AML6301	80V 2,0kW	11.213.060	IM3016
AML6305	80V 2,0kW	11.213.177	IM3040
AML6307	80V 2,0kW	11.213.227	IM3016
AML6308	80V 2,0kW	11.213.234	IM3040
AML7107	15V 2,5kW	11.217.038	IM7013
AML7114	15V 1,0kW	11.217.090	IM7024
AML7115	15V 2,0kW	11.217.091	IM7025
AML7119	15V 1,5kW	11.217.113	IM7033
AMP2601	24V 2,0kW	11.212.771	IM0040
AMP2602	48V 1,0kW	11.212.851	IM0235
AMP2607	24V 2,1kW	11.212.928	IM0049
AMP2609	24V 2,0kW	11.212.948	IM0052
AMP2610	24V 3,0kW	11.212.950	IM0053
AMP2611	24V 1,5kW	11.212.964	IM0056
AMP3301	80V 1,0kW	11.212.154	IM0160
AMP4311	24V 1,0kW	11.214.261	IM0082
AMP4312	24V 1,0kW	11.214.283	IM0094
AMP4316	24V 2,1kW	11.214.273	IM0088
AMP4318	24V 1,0kW	11.214.297	IM0104
AMP4320	24V 2,1kW	11.214.200	IM0064
AMP4321	24V 1,0kW	11.216.533	IM0267

AMP4505	24V 3,0kW	11.212.786	IM0141
AMP4507	48V 1,0kW	11.212.808	IM0332
AMP4508	24V 2,6kW	11.214.279	IM0206
AMP4509	24V 3,0kW	11.214.299	IM0205
AMP4512	36V 4,1kW	11.216.004	IM0111
AMP4517	24V 3,0kW	11.216.210	IM0141
AMP4524	24V 3,0kW	11.216.428	IM0141
AMP4525	24V 2,0kW	11.216.534	IM0266
AMP4526	24V 3,0kW	11.216.555	IM0256
AMP4529	80V 3,0kW	11.216.591	IM0265
AMP4530	48V 3,7kW	11.216.594	IM0272
AMP4531	24V 4,1kW	11.216.596	IM0273
AMP4537	24V 3,0kW	11.216.755	IM0141
AMP4539	48V 3,7kW	11.216.915	IM0360
AMP4609	36V 5,0kW	11.212.298	IM0111
AMP4610	24V 3,0kW	11.212.301	IM0077
AMP4625	24V 3,0kW	11.212.423	IM0017
AMP4632	24V 3,0kW	11.214.255	IM0077
AMP4633	48V 3,7kW	11.214.257	IM0078
AMP4634	80V 3,0kW	11.214.258	IM0079
AMP4635	80V 3,0kW	11.214.259	IM0080
AMP4636	24V 1,1kW	11.214.260	IM0081
AMP4640	24V 1,1kW	11.214.235	IM0070
AMP4643	24V 4,1kW	11.214.254	IM0076
AMP4646	48V 4,3kW	11.214.270	IM0085
AMP4648	24V 1,1kW	11.214.272	IM0087
AMP4649	24V 1,5kW	11.214.275	IM0090
AMP4650	24V 2,6kW	11.214.276	IM0091
AMP4651	24V 2,0kW	11.214.277	IM0092
AMP4652	24V 1,6kW	11.214.282	IM0093
AMP4654	24V 2,0kW	11.214.284	IM0095
AMP4655	24V 1,1kW	11.214.285	IM0096
AMP4656	24V 1,1kW	11.214.287	IM0097
AMP4657	48V 3,7kW	11.214.289	IM0099
AMP4659	24V 2,5kW	11.214.232	IM0068
AMP4660	24V 3,0kW	11.214.233	IM0069
AMP4661	24V 3,0kW	11.214.269	IM0084
AMP4662	24V 1,6kW	11.214.292	IM0101
AMP4663	24V 2,0kW	11.214.242	IM0073
AMP4664	24V 2,5kW	11.214.240	IM0072
AMP4666	24V 2,0kW	11.214.262	IM0083
AMP4667	24V 1,6kW	11.214.295	IM0103
AMP4668	24V 1,5kW	11.214.291	IM0100
AMP4669	24V 2,1kW	11.214.296	IM0367
AMP4676	24V 3,0kW	11.214.434	IM0077
AMP4677	48V 3,7kW	11.214.436	IM0078
AMP4678	24V 3,0kW	11.214.437	IM0084
AMP4679	24V 4,1kW	11.214.438	IM0076
AMP4680	48V 3,7kW	11.214.439	IM0099
AMP4681	80V 3,0kW	11.214.441	IM0079
AMP4682	80V 3,0kW	11.214.442	IM0080
AMP4684	24V 2,5kW	11.214.444	IM0072
AMP4685	24V 3,0kW	11.214.446	IM0069
AMP4686	24V 2,5kW	11.214.448	IM0068
AMP4687	24V 3,0kW	11.212.643	IM0141
AMP5303	48V 0,3kW	11.214.252	IM0074
AMP5609	72V 0,2kW	11.214.253	IM0075
AMP5610	24V 5,5kW	11.214.210	IM0065
AMP5612	24V 5,5kW	11.214.440	IM0065
AMP5614	80V 1,0kW	11.216.245	IM0160
AMP5617	24V 5,5kW	11.216.754	IM0303
AMP5618	24V 5,5kW	11.216.823	IM0324
AMT2603	48V 4,0kW	11.212.883	IM0236
AMT2607	48V 4,0kW	11.216.015	IM0237
AMT2610	48V 4,5kW	11.216.217	IM0333
AMT2627	48V 4,5kW	11.216.617	IM0301
AMT4630	72V 5,0kW	11.214.409	IM0108
AMT4642	48V 11,5kW	11.212.903	IM0180
AMT4647	48V 11,5kW	11.216.053	IM0180
AMT4649	36V 6,9kW	11.216.101	IM0234
AMT4650	24V 8,8kW	11.216.111	IM0369
AMT4659	48V 11,5kW	11.216.404	IM0180
AMT4660	36V 6,9kW	11.216.436	IM0234
AMT4664	36V 6,9kW	11.216.510	IM0234
AMT5603	48V 4,0kW	11.214.408	IM0107
AMT7107	30V 1,5kW	11.217.072	IM7040
AMT7121	30V 3,3kW	11.217.094	IM7027
AMT7126	30V 5,0kW	11.217.109	IM7031
AMT7206	15V 6,5kW	11.217.021	IM7005
AMT7207	30V 4,0kW	11.217.073	IM7041
AMT7210	15V 6,5kW	11.217.139	IM7005
AMV7109	15V 5,0kW	11.217.020	IM7004
AMV7115	30V 5,0kW	11.217.070	IM7020
AMV7122	35V 15,0kW	11.217.136	IM7043
AMV7123	15V 5,0kW	11.217.140	IM7004

EN Spare parts for motors

DE Ersatzteile für motoren

FR Pièces détachées pour moteurs

IT Pezzi di ricambio per motori

DC Motors/DC Motor/Moteur/DC motore

1

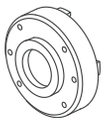

Drive end bracket
Antriebslagerdeckel
Palier avant
Supporto anteriore

2

Bearing
Lager
Roulement
Cuscinetto

3

Central cover
Mitteldeckel
Palier intermédiaire
Coperchio centrale

4

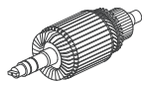

Armature
Anker
Induit
Indotto

5

Bearing
Lager
Roulement
Cuscinetto

6

Gasket
Dichtung
Joint en caoutchouc
Guarnizione

7

Screw
Schraube
Vis
Vite

8

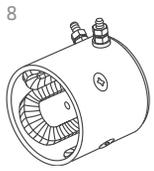

Stator
Ständer
Stator
Statore

9

Connection plate
Anschlussplate
Bornier moteur
Piastrina di colleg.

10

Brush holder
Bürstenplatte
Porte-balais
Portaspazzole

11

Set of brushes
Bürstensatz
Balais
Serie spazzole

12

Thermal protector
Thermoschutz
Protection thermique
Protezione termica

13

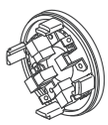

Rear end bracket
Hinterenlagerdeckel
Palier arrière
Coperchio posteriore

14

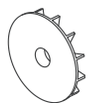

Fan
Lüfter
Ventilateur
Ventola

15

Protecting cover
Schutzdeckel
Capot de protection
Coperchio di protezione

16

Switch
Magnetschalter
Contacteur à solénoïde
Interruttore

FIG.			1	2	3	4	5	6	7
B	**11.212.066**	AMJ5632 12V 2,1kW	15.130.602	16.905.263	-	16.905.683	16.905.611	-	16.905.680
B	**11.212.067**	AMJ5633 24V 2,1kW	15.130.602	16.905.263	-	16.905.679	16.905.611	-	16.905.680
B	**11.212.084**	AMJ5648 24V 2,0kW	15.131.234	16.905.263	-	16.905.533	16.905.163	16.905.792	16.905.534
B	**11.212.085**	AMJ5649 12V 1,5kW	15.130.602	16.905.263	-	16.905.556	16.905.163	-	16.906.454
B	**11.212.086**	AMJ5650 24V 2,0kW	15.130.602	16.905.263	-	16.905.553	16.905.163	-	16.906.454
B	**11.212.087**	AMJ5651 12V 1,5kW	15.130.734	16.905.263	-	16.905.556	16.905.163	-	16.906.356
B	**11.212.088**	AMJ5652 24V 2,0kW	15.130.734	16.905.263	-	16.905.553	16.905.163	-	16.906.356
B	**11.212.089**	AMJ5653 12V 1,5kW	15.130.766	16.905.263	-	16.905.556	16.905.163	-	16.906.454
B	**11.212.090**	AMJ5654 24V 2,0kW	15.130.766	16.905.263	-	16.905.553	16.905.163	-	16.906.454
B	**11.212.106**	AMJ4603 24V 1,9kW	-	16.905.699	-	16.360.384	16.905.611	-	15.300.832
B	**11.212.107**	AMJ5666 12V 1,5kW	-	16.905.699	-	16.360.382	16.905.611	-	15.300.728
B	**11.212.108**	AMJ5667 12V 2,1kW	-	16.905.699	-	16.360.384	16.905.611	-	15.300.832
D	**11.212.116**	AMK5601 24V 3,0kW	16.281.703	16.905.263	-	16.906.047	16.906.025	16.905.792	16.906.048
D	**11.212.138**	AMK5607 24V 3,0kW	-	16.905.263	-	16.906.204	16.906.025	-	16.906.205
D	**11.212.146**	AMK3301 72V 1,0kW	16.281.690	16.905.263	16.281.728	16.906.413	16.906.025	16.905.792	16.906.411
B	**11.212.169**	AMJ5690 24V 2,1kW	-	16.905.699	-	16.360.468	16.905.611	-	15.300.832
D	**11.212.188**	AMK5615 24V 3,0kW	-	16.906.382	-	16.360.509	16.906.025	-	16.906.363
B	**11.212.212**	AMJ5511 24V 2,0kW	-	16.905.699	-	16.360.529	16.905.611	-	15.300.728
D	**11.212.215**	AMK5622 24V 3,0kW	-	16.905.699	-	16.360.553	16.906.025	-	16.906.363
C	**11.212.229**	AMJ5518 24V 2,0kW	16.281.651	16.905.263	16.281.750	16.906.407	16.905.163	16.905.536	16.906.387
B	**11.212.233**	AMJ5521 12V 1,3kW	16.281.651	16.905.263	-	16.906.102	16.905.163	16.905.536	18.900.412
B	**11.212.234**	AMJ5522 24V 2,0kW	16.281.651	16.905.263	-	16.905.533	16.905.163	16.905.536	18.900.412
B	**11.212.255**	AMJ5529 24V 2,0kW	-	16.905.699	-	16.360.272	16.905.611	-	16.905.534
B	**11.212.257**	AMJ5531 12V 2,1kW	15.130.602	16.905.263	-	16.906.138	16.905.611	-	16.906.140
B	**11.212.286**	AMJ5545 48V 2,0kW	-	16.905.699	-	16.361.098	16.905.611	-	16.906.414
B	**11.212.299**	AMJ5549 24V 2,0kW	16.281.572	16.905.263	-	16.905.533	16.905.163	16.905.536	18.900.412
D	**11.212.306**	AMK5633 24V 3,0kW	16.283.009	16.906.383	-	16.360.602	16.906.025	-	16.906.363
B	**11.212.309**	AMJ5552 12V 2,1kW	-	16.905.699	-	16.360.459	16.905.611	-	16.905.747
B	**11.212.331**	AMJ5560 24V 2,0kW	16.281.572	16.905.263	-	16.905.533	16.905.163	16.905.536	18.900.412
D	**11.212.332**	AMK5637 24V 3,0kW	16.281.703	16.905.263	-	16.906.047	16.906.025	16.905.792	16.906.048
B	**11.212.335**	AMJ5561 12V 1,5kW	16.281.572	16.905.263	-	16.906.102	16.905.163	16.905.536	18.900.412
B	**11.212.358**	AMJ5568 24V 2,0kW	15.131.234	16.905.263	-	16.905.533	16.905.163	16.905.792	16.905.534
B	**11.212.360**	AMJ5570 12V 1,5kW	16.281.651	16.905.263	-	16.906.102	16.905.163	16.905.536	18.900.412
B	**11.212.361**	AMJ5571 24V 2,0kW	16.281.651	16.905.263	-	16.905.533	16.905.163	16.905.536	18.900.412
B	**11.212.385**	AMJ5580 12V 1,4kW	15.131.188	16.905.699	-	16.906.285	16.905.163	-	16.906.094
B	**11.212.386**	AMJ5581 12V 1,9kW	15.131.188	16.905.699	-	16.906.292	16.905.163	-	16.906.095
D	**11.212.393**	AMK5639 24V 3,0kW	-	16.905.699	-	16.360.553	16.906.025	-	16.906.363
D	**11.212.398**	AMK5642 24V 3,0kW	16.281.690	16.906.517	16.281.728	16.906.701	16.906.025	16.905.792	16.906.733
D	**11.212.400**	AMK5644 24V 3,0kW	16.281.746	16.905.263	-	16.906.047	16.906.025	16.905.536	16.906.410
B	**11.212.414**	AMJ5589 12V 2,1kW	15.130.602	16.905.263	-	16.906.138	16.905.163	-	16.906.140
B	**11.212.415**	AMJ5590 24V 2,1kW	15.130.602	16.905.263	-	16.906.139	16.905.163	-	16.906.140
B	**11.212.417**	AMJ5592 24V 2,0kW	15.131.411	16.906.075	-	16.906.149	16.905.163	-	16.906.150
G	**11.212.423**	AMP4625 24V 3,0kW	15.130.955	16.906.508	-	16.360.655	16.906.509	16.906.510	-
B	**11.212.449**	AMJ4635 12V 1,6kW	-	-	-	16.360.718	16.905.163	-	16.906.389
B	**11.212.450**	AMJ4636 24V 2,0kW	-	-	-	16.360.722	16.905.163	-	16.906.389
D	**11.212.461**	AMJ5595 24V 2,1kW	16.281.651	16.905.263	16.281.750	16.906.418	16.905.163	16.905.536	16.906.363
B	**11.212.491**	AMJ5131 12V 1,5kW	15.130.602	16.905.263	-	16.905.556	16.905.163	-	16.906.454
B	**11.212.492**	AMJ5132 24V 2,0kW	15.130.602	16.905.263	-	16.905.553	16.905.163	-	16.906.454
B	**11.212.511**	AMJ5107 24V 2,0kW	16.281.567	16.905.263	-	16.905.533	16.905.163	16.905.792	18.900.412
B	**11.212.516**	AMJ5110 12V 1,5kW	-	16.905.699	-	16.360.704	16.905.163	-	16.906.414
B	**11.212.524**	AMJ5114 24V 2,1kW	15.130.602	16.905.263	-	16.906.139	16.905.611	-	16.906.140
A	**11.212.545**	AMJ4647 12V 1,6kW	-	16.905.699	-	16.906.465	15.120.087	-	16.906.462
A	**11.212.546**	AMJ4648 24V 2,2kW	-	16.905.699	-	16.906.461	15.120.087	-	16.906.462
B	**11.212.548**	AMJ5119 12V 1,5kW	16.281.567	16.905.263	-	16.906.102	16.905.163	16.905.792	18.900.412
A	**11.212.553**	AMJ4649 12V 1,6kW	-	16.905.699	-	16.906.465	15.120.087	-	16.906.462
A	**11.212.554**	AMJ5121 12V 1,6kW	-	16.905.699	-	16.906.465	15.120.087	-	16.906.462
B	**11.212.557**	AMJ5124 12V 1,5kW	-	16.915.296	-	16.908.792	16.908.630	-	16.905.747
B	**11.212.559**	AMJ5126 24V 2,1kW	15.130.602	16.905.263	-	16.906.139	16.905.611	-	16.906.140
A	**11.212.560**	AMJ5127 24V 2,0kW	-	16.905.699	-	16.361.086	16.908.080	-	16.906.150
B	**11.212.570**	AMJ5133 48V 2,0kW	15.130.602	16.905.263	-	16.906.485	16.905.163	-	16.906.454
A	**11.212.580**	AMJ4655 24V 2,2kW	16.908.438	16.905.699	-	16.908.441	16.905.163	-	16.906.094
D	**11.212.581**	AMK5662 48V 3,0kW	16.283.008	16.905.263	-	16.906.549	16.906.025	16.905.792	16.906.363
D	**11.212.591**	AMK3303 72V 1,0kW	16.281.690	16.906.517	16.281.728	16.906.413	16.906.025	16.905.792	16.906.411
C	**11.212.596**	AMJ5143 12V 1,5kW	15.130.734	16.905.263	16.281.750	16.908.841	16.905.163	-	16.908.141
C	**11.212.600**	AMJ5145 24V 2,1kW	16.281.651	16.905.263	16.281.750	16.906.418	16.905.163	16.905.536	16.906.363
A	**11.212.609**	AMJ5175 12V 1,6kW	-	16.905.699	-	16.906.801	15.120.087	-	16.906.802
A	**11.212.610**	AMJ5176 24V 2,2kW	-	16.905.699	-	16.906.803	15.120.087	-	16.906.802

8	9	10	11	12	13	14	15	16
16.280.286	-	-	16.906.865	-	16.906.234	-	16.906.020	-
16.280.287	-	-	16.905.681	-	16.906.235	-	16.906.020	-
16.280.359	-	-	16.905.535	-	16.906.258	-	16.906.290	-
16.280.672	-	-	16.906.455	-	16.906.456	-	16.906.019	-
16.280.665	-	-	16.906.457	-	16.906.458	-	16.906.019	-
16.280.672	-	-	16.905.677	-	16.906.253	-	16.906.019	-
16.280.665	-	-	16.905.535	-	16.906.258	-	16.906.019	-
16.282.105	-	-	16.905.677	-	16.906.253	-	16.906.019	-
16.280.992	-	-	16.905.535	-	16.906.258	-	16.906.019	-
16.280.391	-	-	16.905.681	-	16.906.235	-	16.906.052	-
16.280.392	-	-	16.905.677	-	16.906.250	-	16.906.019	-
16.280.393	-	-	16.906.096	-	16.906.234	-	16.906.020	-
16.280.397	-	-	16.906.026	-	16.906.206	-	16.906.027	-
16.280.421	-	-	16.906.026	-	16.908.660	-	16.906.027	-
16.280.655	-	-	16.906.379	-	16.906.732	15.421.058	16.906.412	-
16.280.469	-	-	16.906.021	-	16.906.235	-	16.906.020	-
16.282.419	-	-	16.906.026	-	16.906.206	-	16.906.027	-
16.280.533	-	-	16.905.535	-	16.906.259	-	16.906.019	-
16.280.555	-	-	16.906.026	-	16.906.206	-	16.906.027	-
16.280.586	-	-	16.905.535	-	16.906.258	-	16.906.386	-
16.280.558	-	-	16.905.677	16.903.090	16.906.253	-	16.906.542	-
16.280.559	-	-	16.905.535	16.903.090	16.906.258	-	16.906.542	-
16.280.601	-	-	16.905.535	-	16.906.259	-	16.906.019	-
16.280.574	-	-	16.906.096	-	16.906.234	-	16.906.020	-
16.280.906	-	-	16.906.486	-	16.906.703	-	16.906.019	-
16.280.586	-	-	16.905.535	-	16.906.258	-	16.906.019	-
16.280.598	-	-	16.906.026	16.903.459	16.906.364	-	16.906.385	-
16.280.595	-	-	16.906.096	-	16.906.234	-	16.906.020	-
16.280.586	-	-	16.905.535	-	16.906.258	-	16.906.019	-
16.280.632	-	-	16.906.026	-	16.908.660	-	16.906.027	-
16.280.624	-	-	16.905.677	-	16.906.253	-	16.906.019	-
16.280.359	-	-	16.906.457	-	16.906.458	-	16.906.290	-
16.280.558	-	-	16.906.455	16.903.090	16.906.253	-	16.906.542	-
16.280.559	-	-	16.906.457	16.903.090	16.906.458	-	16.906.542	-
16.280.539	-	-	16.905.677	-	16.906.253	-	16.906.286	-
16.280.540	-	-	16.906.096	-	16.906.255	-	16.906.293	-
16.280.555	-	-	16.906.026	-	16.906.206	-	16.906.027	-
16.280.905	-	-	16.906.026	-	16.908.660	-	16.906.734	-
16.280.731	-	-	16.906.026	-	16.908.660	-	16.906.027	-
16.280.780	-	-	16.906.865	-	16.906.587	-	16.906.591	-
16.280.781	-	-	16.906.021	-	16.906.590	-	16.906.591	-
16.280.665	-	-	16.905.535	-	16.906.258	-	16.906.019	-
16.280.399	16.906.547	16.906.546	16.906.545	16.903.351	16.906.521	-	16.906.548	-
16.280.716	-	-	16.905.677	-	16.908.018	-	16.906.290	-
16.280.717	-	-	16.905.535	-	16.908.019	-	16.906.290	-
16.280.683	-	-	16.906.380	-	16.906.419	-	16.906.420	-
16.280.772	-	-	16.906.455	16.903.487	16.906.456	-	16.906.322	-
16.280.773	-	-	16.906.457	16.903.487	16.906.458	-	16.906.322	-
16.280.732	-	-	16.905.535	16.903.419	16.906.258	-	16.906.542	-
16.280.723	-	-	16.905.677	-	16.906.250	-	16.906.019	-
16.280.575	-	-	16.908.852	-	16.908.851	-	16.906.020	-
16.280.760	-	16.906.468	16.906.466	-	16.281.770	-	-	-
16.280.755	-	16.908.203	16.906.463	-	16.281.771	-	-	-
16.280.908	-	-	16.906.455	-	16.906.253	-	16.906.290	-
16.280.760	-	16.908.204	16.906.466	-	16.281.771	-	-	-
16.280.764	-	16.908.205	16.906.466	-	16.281.771	-	-	-
16.280.763	-	-	16.906.455	-	16.906.253	-	16.906.019	-
16.280.575	-	-	16.906.021	16.904.783	16.906.235	-	16.906.097	-
16.282.093	-	16.906.472	16.906.463	-	16.283.078	-	-	-
16.280.766	-	-	16.906.486	-	16.906.487	-	16.906.019	-
16.280.783	-	16.906.875	16.906.463	-	16.283.753	-	-	-
16.280.784	-	-	16.906.550	-	16.906.551	-	16.906.027	-
16.280.655	-	-	16.906.379	-	16.906.732	-	16.906.412	-
16.280.672	-	-	16.906.455	-	16.906.253	-	16.906.386	-
16.280.683	-	-	16.906.096	-	16.908.365	-	16.906.420	-
16.280.895	-	16.906.471	16.906.466	-	16.281.771	-	-	-
16.280.896	-	16.906.472	16.906.463	-	16.281.771	-	-	-

FIG.			1	2	3	4	5	6	7
A	**11.212.611**	AMJ5177 12V 1,6kW	16.283.748	16.906.774	-	16.361.021	15.120.087	-	16.906.775
A	**11.212.612**	AMJ5178 24V 2,2kW	16.283.748	16.906.774	-	16.361.022	15.120.087	-	16.906.775
D	**11.212.618**	AMK5666 24V 3,0kW	16.283.010	16.905.953	-	16.906.696	16.906.025	-	16.906.697
A	**11.212.619**	AMJ4662 24V 2,2kW	-	16.905.699	-	16.906.461	15.120.087	-	16.906.462
A	**11.212.621**	AMJ4663 12V 1,6kW	-	16.905.699	-	16.906.465	15.120.087	-	16.906.462
A	**11.212.622**	AMJ4664 12V 1,6kW	-	16.905.699	-	16.906.465	15.120.087	-	16.906.462
A	**11.212.623**	AMJ5182 12V 1,6kW	-	16.905.699	-	16.906.465	15.120.087	-	16.906.462
A	**11.212.624**	AMJ5183 24V 2,2kW	-	16.905.699	-	16.906.461	15.120.087	-	16.906.462
B	**11.212.627**	AMJ5186 12V 1,5kW	16.281.567	16.905.263	-	16.906.102	16.905.163	16.905.792	18.900.412
B	**11.212.628**	AMJ5221 24V 2,1kW	16.281.869	16.905.263	16.281.750	16.906.418	16.905.163	16.905.536	16.906.363
A	**11.212.633**	AMJ5222 12V 1,6kW	-	16.905.699	-	16.361.087	16.908.080	-	16.906.150
D	**11.212.635**	AMK5668 24V 3,0kW	16.283.027	16.906.517	16.281.728	16.906.701	16.906.025	16.915.621	16.906.699
A	**11.212.648**	AMJ4666 12V 1,6kW	16.908.438	16.905.699	-	16.908.439	16.905.163	-	16.906.094
B	**11.212.710**	AMJ4672 12V 2,1kW	-	-	-	16.361.254	16.905.163	-	16.906.864
B	**11.212.711**	AMJ4673 24V 2,2kW	-	-	-	16.361.255	16.905.163	-	16.906.864
A	**11.212.721**	AMJ4680 12V 1,6kW	-	16.905.699	-	16.361.307	16.908.080	-	16.915.447
A	**11.212.722**	AMJ4681 24V 2,2kW	-	16.905.699	-	16.361.307	16.908.080	-	16.915.447
A	**11.212.723**	AMJ4682 12V 1,6kW	-	16.905.699	-	16.362.336	16.908.630	-	16.906.873
A	**11.212.725**	AMJ5193 24V 2,2kW	-	16.905.699	-	16.361.308	16.908.080	-	16.915.447
B	**11.212.729**	AMJ4685 24V 1,9kW	16.283.367	16.905.263	-	16.361.620	16.905.163	-	16.908.141
B	**11.212.731**	AMJ5195 24V 2,1kW	16.283.367	16.905.263	-	16.361.640	16.905.163	-	16.906.140
A	**11.212.736**	AMJ5196 24V 2,2kW	15.131.713	16.906.774	-	16.361.022	15.120.087	-	16.906.775
A	**11.212.737**	AMJ5197 12V 1,6kW	15.131.713	16.906.774	-	16.361.021	15.120.087	-	16.906.775
A	**11.212.746**	AMJ5198 24V 2,2kW	16.283.164	16.905.263	-	16.906.986	15.120.087	16.905.792	16.908.087
A	**11.212.748**	AMJ5214 24V 2,2kW	16.283.164	16.905.263	-	16.906.986	15.120.087	16.905.792	16.908.087
A	**11.212.750**	AMJ5202 12V 1,6kW	16.283.164	16.905.263	-	16.906.989	15.120.087	16.905.792	16.908.087
A	**11.212.754**	AMJ5206 24V 2,2kW	16.283.215	16.905.263	-	16.906.986	15.120.087	16.905.536	16.908.087
A	**11.212.758**	AMJ5210 12V 1,6kW	16.283.215	16.905.263	-	16.906.989	15.120.087	16.905.536	16.908.087
G	**11.212.771**	AMP2601 24V 2,0kW	15.131.596	16.908.288	-	16.908.415	16.906.672	16.908.290	-
G	**11.212.786**	AMP4505 24V 3,0kW	15.133.264	16.906.671	-	16.908.414	16.906.672	16.915.599	-
B	**11.212.792**	AMJ5226 12V 2,1kW	15.130.602	16.905.263	-	16.906.138	16.905.611	-	16.906.140
B	**11.212.797**	AMJ4689 12V 1,5kW	-	-	-	16.361.344	16.905.163	-	16.908.017
B	**11.212.798**	AMJ4690 24V 2,0kW	-	-	-	16.361.345	16.905.163	-	16.908.017
G	**11.212.808**	AMP4507 48V 1,0kW	16.281.980	16.906.508	-	16.361.353	16.906.672	-	-
D	**11.212.829**	AMK5682 24V 3,0kW	16.281.690	16.905.263	16.281.728	16.906.701	16.906.025	16.905.792	16.906.699
B	**11.212.831**	AMJ4696 12V 0,7kW	-	-	-	16.361.369	16.905.163	-	16.908.330
B	**11.212.832**	AMJ4697 24V 0,9kW	-	-	-	16.361.376	16.905.163	-	16.908.330
D	**11.212.843**	AMK5684 24V 3,0kW	16.283.010	16.905.953	-	16.906.696	16.906.025	-	16.906.697
G	**11.212.851**	AMP2602 48V 1,0kW	16.281.980	16.906.508	-	16.361.353	16.906.672	-	-
D	**11.212.854**	AMK5685 24V 3,0kW	-	16.906.382	16.281.728	16.906.701	16.906.025	-	16.906.699
C	**11.212.855**	AMJ5233 24V 2,0kW	15.130.734	16.905.263	16.281.750	16.908.140	16.905.163	-	16.908.141
A	**11.212.864**	AMJ5238 12V 1,6kW	15.131.713	16.906.774	-	16.908.142	16.908.080	-	16.908.143
A	**11.212.865**	AMJ5239 24V 2,2kW	15.131.713	16.906.774	-	16.908.144	16.908.080	-	16.908.143
B	**11.212.877**	AMJ4705 12V 1,6kW	-	-	-	16.361.426	16.905.163	-	16.908.275
B	**11.212.878**	AMJ4706 24V 2,0kW	-	-	-	16.361.431	16.905.163	-	16.908.275
H	**11.212.883**	AMT2603 48V 4,0kW	16.908.221	16.908.189	-	16.908.223	16.908.194	-	-
D	**11.212.892**	AMK5687 12V 2,4kW	16.281.690	16.905.263	16.281.728	16.906.701	16.906.025	16.905.792	16.906.699
B	**11.212.895**	AMJ5244 24V 2,1kW	-	16.905.699	-	16.360.468	16.905.163	-	16.908.017
A	**11.212.896**	AMJ4707 12V 1,6kW	-	16.905.699	-	16.906.801	15.120.087	-	16.906.802
I	**11.212.903**	AMT4642 48V 11,5kW	16.908.200	16.908.189	-	16.908.201	16.908.194	16.908.191	-
A	**11.212.918**	AMJ4708 24V 2,2kW	-	16.905.699	-	16.906.803	15.120.087	-	16.906.802
A	**11.212.920**	AMJ4709 12V 1,5kW	-	-	-	16.361.385	16.908.080	-	16.908.277
B	**11.212.922**	AMJ5253 24V 2,0kW	15.131.234	16.905.263	-	16.905.533	16.905.163	16.905.792	16.905.534
B	**11.212.923**	AMJ5254 24V 2,0kW	16.281.567	16.905.263	-	16.905.533	16.905.163	16.905.792	18.900.412
B	**11.212.925**	AMJ5256 12V 1,5kW	15.131.234	16.905.263	-	16.906.102	16.905.163	16.905.792	16.905.534
G	**11.212.928**	AMP2607 24V 2,1kW	15.131.642	16.908.288	-	16.908.289	16.906.672	16.908.290	-
A	**11.212.935**	AMJ5265 12V 1,6kW	-	16.905.699	-	16.908.366	15.120.087	-	16.906.802
A	**11.212.936**	AMJ5266 24V 2,2kW	-	16.905.699	-	16.908.364	15.120.087	-	16.906.802
B	**11.212.940**	AMJ5268 12V 1,5kW	-	16.905.699	-	16.360.382	16.905.611	-	16.906.150
G	**11.212.948**	AMP2609 24V 2,0kW	15.131.595	16.908.288	-	16.908.484	16.906.671	16.908.485	-
G	**11.212.950**	AMP2610 24V 3,0kW	15.130.955	16.906.508	-	16.360.655	16.906.509	16.906.510	-
A	**11.212.957**	AMJ5272 12V 1,6kW	15.133.106	16.906.075	-	16.908.153	16.905.163	-	16.906.150
A	**11.212.958**	AMJ5273 24V 2,2kW	15.133.106	16.906.075	-	16.908.154	16.905.163	-	16.906.150
G	**11.212.964**	AMP2611 24V 1,5kW	15.131.600	16.908.570	-	16.360.934	16.906.672	16.908.290	-
D	**11.212.974**	AMK5688 48V 3,0kW	-	16.905.699	-	16.361.468	16.906.025	-	16.908.078
A	**11.212.987**	AMJ5279 24V 2,2kW	15.131.713	16.906.774	-	16.908.144	16.905.163	-	16.908.143
D	**11.212.993**	AMK5690 24V 3,0kW	-	16.906.382	-	16.906.047	16.906.025	-	16.915.594

16.280.897	-	16.906.471	16.906.466	-	16.281.771	-	-	-
16.280.898	-	16.906.472	16.906.463	-	16.281.771	-	-	-
16.282.680	-	-	16.906.026	-	16.908.660	-	16.906.698	-
16.280.755	-	16.906.769	16.906.463	-	16.281.771	-	-	-
16.280.760	-	16.906.468	16.906.466	-	16.281.770	-	-	-
16.280.760	-	16.906.470	16.906.466	-	16.281.771	-	-	-
16.280.764	-	16.908.205	16.906.466	-	16.281.771	-	-	-
16.280.765	-	16.908.206	16.906.463	-	16.281.771	-	-	-
16.280.908	-	-	16.906.455	-	16.906.253	-	16.906.290	-
16.280.683	-	-	16.906.096	-	16.908.365	-	16.906.420	-
16.282.172	-	16.906.471	16.906.466	-	16.283.078	-	-	-
16.280.503	-	-	16.906.026	-	16.906.206	15.421.058	16.915.597	-
16.282.057	-	16.906.876	16.906.466	-	16.283.289	-	-	-
16.282.023	-	-	16.906.865	-	16.906.866	-	16.906.867	-
16.282.024	-	-	16.906.021	-	16.906.868	-	16.906.867	-
16.282.027	-	16.906.874	16.906.466	-	16.283.078	-	-	-
16.282.014	-	16.906.875	16.906.463	-	16.283.078	-	-	-
16.282.541	-	16.907.662	16.907.602	-	16.283.896	-	-	-
16.282.012	-	16.908.629	16.906.463	-	16.283.078	-	-	-
16.282.244	-	-	16.906.096	-	16.906.587	-	16.906.591	-
16.282.254	-	-	16.906.096	-	16.906.587	-	16.906.591	-
16.280.898	-	16.906.472	16.906.463	16.908.281	16.281.771	-	-	16.908.157
16.280.897	-	16.906.471	16.906.466	16.908.281	16.281.771	-	-	16.908.158
16.282.049	-	16.907.599	16.907.600	-	16.281.771	-	-	-
16.282.049	-	16.907.599	16.907.600	16.902.016	16.281.771	-	-	-
16.282.050	-	16.907.601	16.907.602	-	16.281.771	-	-	-
16.282.049	-	16.907.599	16.907.600	-	16.281.779	-	-	-
16.282.050	-	16.907.601	16.907.602	-	16.281.779	-	-	-
16.908.416	16.908.285	16.908.418	16.908.417	-	16.908.419	-	16.908.096	-
16.282.240	16.908.420	16.908.421	16.906.545	-	16.908.422	16.908.423	16.906.677	-
16.280.575	-	-	16.906.096	-	16.908.853	-	16.906.020	-
16.280.716	-	-	16.905.677	-	16.908.018	-	16.906.290	-
16.280.717	-	-	16.906.457	-	16.908.019	-	16.906.290	-
16.282.071	16.906.675	16.908.094	16.908.093	-	16.908.095	-	16.908.096	-
16.280.905	-	-	16.906.026	-	16.908.660	15.421.058	16.906.734	-
16.282.069	-	-	16.905.677	16.904.908	16.908.276	-	16.906.542	-
16.282.087	-	-	16.906.457	16.904.909	16.906.458	-	16.906.542	-
16.280.939	-	-	16.906.026	-	16.908.660	-	16.906.698	-
16.282.146	16.908.285	16.908.094	16.908.093	-	16.908.286	-	16.908.096	-
16.280.905	-	-	16.906.026	-	16.908.660	15.421.058	16.906.734	-
16.280.665	-	-	16.905.535	-	16.906.258	-	16.906.386	-
16.280.897	-	16.906.471	16.906.466	-	16.283.126	-	-	-
16.280.898	-	16.906.472	16.906.463	-	16.283.126	-	-	-
16.282.113	-	-	16.905.677	16.904.968	16.908.276	-	16.906.284	-
16.282.114	-	-	16.906.457	16.904.969	16.906.458	-	16.906.284	-
16.908.224	16.908.225	16.908.228	16.908.723	-	16.908.229	16.908.222	16.915.601	-
16.282.107	-	-	16.906.054	-	16.908.117	15.421.058	16.906.734	-
16.282.117	-	-	16.906.021	16.904.783	16.906.235	-	16.908.217	16.908.218
16.282.118	-	16.906.874	16.906.466	-	-	-	-	16.908.158
16.908.202	16.908.193	16.908.196	16.908.195	16.904.805	16.908.197	16.908.199	16.908.198	-
16.282.119	-	16.908.220	16.906.463	-	16.281.771	-	-	16.908.157
16.282.079	-	16.420.476	16.906.466	-	16.283.218	-	-	-
16.282.191	-	-	16.905.535	-	16.908.300	-	16.908.299	-
16.282.191	-	-	16.905.535	-	16.908.300	-	16.908.299	-
16.282.190	-	-	16.905.677	-	16.908.297	-	16.908.299	-
16.908.291	16.908.285	16.908.418	16.908.417	-	16.908.292	16.908.293	16.908.096	-
16.282.196	-	16.906.471	16.906.466	-	16.281.771	-	-	-
16.282.197	-	16.906.472	16.908.051	-	16.281.771	-	-	-
16.282.121	-	-	16.905.677	-	16.906.250	-	16.906.019	-
16.282.228	16.908.285	16.908.487	16.908.417	-	16.908.488	-	16.908.489	-
16.282.127	16.908.287	16.906.546	16.906.545	16.903.351	16.906.521	-	16.906.548	-
16.282.050	-	16.906.471	16.906.466	16.904.864	16.283.754	-	-	-
16.282.049	-	16.906.472	16.906.463	16.904.864	16.283.754	-	-	-
16.908.291	16.908.285	16.908.418	16.908.417	-	16.908.571	-	16.908.096	-
16.280.922	-	-	16.906.550	-	16.906.551	-	16.906.027	-
16.280.898	-	16.906.472	16.906.463	16.904.875	16.283.126	-	-	-
16.280.905	-	-	16.906.026	16.904.472	16.908.231	-	16.908.232	-

FIG.			1	2	3	4	5	6	7
A	**11.212.996**	AMJ4717 24V 2,0kW	-	-	-	16.361.685	16.908.080	-	16.908.277
G	**11.216.004**	AMP4512 36V 4,1kW	15.131.613	16.906.671	-	16.360.969	16.908.194	16.915.599	-
A	**11.216.009**	AMJ5281 24V 2,2kW	-	16.905.699	-	16.908.155	15.120.087	-	15.300.728
E	**11.216.011**	AMK4626 24V 3,0kW	16.283.233	16.908.546	15.133.378	16.361.547	16.907.608	-	16.908.258
H	**11.216.015**	AMT2607 48V 4,0kW	16.908.411	16.908.189	-	16.908.412	16.908.194	-	-
D	**11.216.016**	AMK5694 24V 3,0kW	16.283.241	16.905.263	-	16.906.047	16.906.025	16.905.792	16.908.402
B	**11.216.021**	AMJ5282 24V 2,0kW	15.131.234	16.905.263	-	16.905.533	16.905.163	16.905.792	16.905.534
B	**11.216.022**	AMJ5283 24V 2,0kW	16.281.567	16.905.263	-	16.905.533	16.905.163	16.905.792	18.900.412
B	**11.216.023**	AMJ5284 48V 2,0kW	15.131.234	16.905.263	-	16.905.794	16.905.163	16.905.792	16.905.534
B	**11.216.024**	AMJ5285 12V 1,5kW	15.131.234	16.905.263	-	16.906.102	16.905.163	16.905.792	16.905.534
B	**11.216.025**	AMJ5286 48V 2,0kW	16.281.567	16.905.263	-	16.905.794	16.905.163	16.905.792	18.900.412
B	**11.216.026**	AMJ5287 24V 2,0kW	16.281.651	16.905.263	-	16.905.533	16.905.163	16.905.536	18.900.412
D	**11.216.028**	AMK5695 12V 2,4kW	-	16.906.382	-	16.906.053	16.906.025	-	16.915.594
A	**11.216.044**	AMJ5290 12V 1,6kW	16.283.215	16.905.263	-	16.906.989	15.120.087	16.905.536	16.908.087
A	**11.216.045**	AMJ5291 24V 2,2kW	16.283.215	16.905.263	-	16.906.986	15.120.087	16.905.536	16.908.087
B	**11.216.049**	AMJ4725 24V 2,0kW	15.133.269	16.905.699	-	16.361.577	16.908.474	-	16.908.476
B	**11.216.050**	AMJ4726 12V 1,5kW	15.133.269	16.905.699	-	16.361.575	16.908.474	-	16.908.476
B	**11.216.051**	AMJ4727 24V 0,9kW	15.133.269	16.905.699	-	16.361.573	16.908.474	-	16.908.477
B	**11.216.052**	AMJ4728 12V 0,7kW	15.133.269	16.905.699	-	16.361.571	16.908.474	-	16.908.477
I	**11.216.053**	AMT4647 48V 11,5kW	16.908.342	16.908.189	-	16.908.201	16.908.194	16.908.191	-
B	**11.216.054**	AMJ5293 12V 2,1kW	16.283.442	16.906.382	-	16.908.895	16.905.163	-	16.908.896
A	**11.216.061**	AMJ5296 24V 2,2kW	16.283.442	16.905.263	-	16.361.805	16.908.630	-	16.908.728
A	**11.216.066**	AMJ5297 24V 2,2kW	16.283.390	16.905.263	-	16.908.597	16.908.080	-	16.905.534
A	**11.216.077**	AMJ5701 12V 1,6kW	15.131.713	16.906.774	-	16.908.142	16.905.163	-	16.908.143
A	**11.216.079**	AMJ5702 24V 2,2kW	-	16.905.699	-	16.361.645	16.905.611	-	16.905.534
A	**11.216.088**	AMJ4735 12V 1,6kW	16.908.438	16.905.699	-	16.361.699	15.120.087	-	16.908.714
I	**11.216.101**	AMT4649 36V 6,9kW	16.908.683	16.908.189	-	16.908.684	16.908.194	16.908.191	-
D	**11.216.105**	AMK5503 24V 3,0kW	-	16.906.382	-	16.906.047	16.906.025	-	16.915.594
I	**11.216.111**	AMT4650 24V 8,8kW	16.908.816	16.908.189	-	16.908.808	16.908.194	16.908.191	-
A	**11.216.117**	AMJ5705 12V 1,6kW	-	16.905.699	-	16.361.677	16.908.474	-	16.906.802
D	**11.216.122**	AMK5504 24V 3,0kW	-	16.906.382	16.281.728	16.906.701	16.906.025	-	16.906.699
E	**11.216.130**	AMK4635 24V 3,0kW	16.283.233	16.908.546	15.133.378	16.361.547	16.907.608	-	16.908.258
B	**11.216.133**	AMJ5707 24V 2,1kW	15.130.602	16.905.263	-	16.905.679	16.905.611	-	16.906.387
B	**11.216.134**	AMJ5708 12V 2,1kW	15.130.602	16.905.263	-	16.905.683	16.905.611	-	16.906.387
D	**11.216.135**	AMK5505 24V 3,0kW	-	16.905.699	-	16.361.662	16.906.025	-	16.906.363
E	**11.216.146**	AMK4638 24V 3,0kW	16.283.233	16.908.546	15.133.378	16.361.547	16.908.547	-	16.908.258
A	**11.216.164**	AMJ5714 24V 2,2kW	-	16.905.699	-	16.361.645	16.905.611	-	16.905.534
D	**11.216.183**	AMK5509 24V 3,0kW	-	16.906.382	-	16.360.509	16.906.025	-	16.915.594
A	**11.216.200**	AMJ4747 12V 1,6kW	-	16.905.699	-	16.361.307	16.908.630	-	16.906.873
A	**11.216.201**	AMJ4748 12V 1,6kW	-	16.908.219	-	16.361.307	16.908.630	-	16.906.873
A	**11.216.202**	AMJ4749 12V 1,6kW	-	16.908.219	-	16.361.307	16.908.630	-	16.906.873
A	**11.216.203**	AMJ5716 12V 1,7kW	16.283.164	16.905.263	-	16.906.989	15.120.087	16.905.792	16.908.087
A	**11.216.204**	AMJ5717 12V 1,6kW	16.283.750	16.905.263	-	16.906.989	15.120.087	16.905.536	16.908.087
A	**11.216.205**	AMJ5718 24V 2,2kW	16.283.751	16.905.263	-	16.906.986	15.120.087	16.905.792	16.908.087
A	**11.216.206**	AMJ4750 24V 2,2kW	-	16.908.219	-	16.361.307	16.908.630	-	16.906.873
A	**11.216.207**	AMJ5719 24V 2,2kW	-	16.908.219	-	16.361.308	16.908.630	-	16.906.873
A	**11.216.208**	AMJ5720 24V 2,2kW	16.283.164	16.905.263	-	16.906.986	15.120.087	16.905.792	16.908.087
A	**11.216.209**	AMJ5721 24V 2,2kW	16.283.750	16.905.263	-	16.906.986	15.120.087	16.905.536	16.908.087
G	**11.216.210**	AMP4517 24V 3,0kW	15.133.264	16.906.671	-	16.908.414	16.906.672	16.915.599	-
A	**11.216.211**	AMJ5723 24V 2,2kW	16.283.750	16.905.263	-	16.906.986	15.120.087	16.905.536	16.908.087
H	**11.216.217**	AMT2610 48V 4,5kW	16.908.221	16.908.189	-	16.908.906	16.908.194	-	-
B	**11.216.224**	AMJ4751 24V 1,9kW	16.283.367	16.905.263	-	16.361.620	16.905.163	-	16.908.141
B	**11.216.225**	AMJ5722 24V 2,1kW	16.283.367	16.905.263	-	16.361.640	16.905.163	-	16.906.140
G	**11.216.245**	AMP5614 80V 1,0kW	15.131.592	16.906.671	-	16.360.923	16.906.672	16.915.599	-
A	**11.216.254**	AMJ5729 24V 2,2kW	16.283.442	16.905.263	-	16.361.805	16.908.630	-	16.908.728
A	**11.216.257**	AMJ5730 24V 2,2kW	-	16.905.699	-	16.361.793	16.908.474	-	16.906.802
D	**11.216.267**	AMK5513 24V 3,0kW	-	16.906.382	16.281.728	16.908.976	16.906.025	-	16.906.699
B	**11.216.273**	AMJ4761 12V 1,6kW	-	-	-	16.360.718	16.905.163	-	16.908.017
B	**11.216.274**	AMJ4762 24V 2,0kW	-	-	-	16.360.722	16.905.163	-	16.908.017
A	**11.216.275**	AMJ4763 12V 1,5kW	-	-	-	16.361.385	16.908.630	-	16.908.277
A	**11.216.276**	AMJ4764 24V 2,0kW	-	-	-	16.361.685	16.908.630	-	16.908.277
A	**11.216.284**	AMJ4765 12V 1,6kW	-	16.905.699	-	16.361.828	16.905.611	-	16.907.940
G	**11.216.288**	AMP4520 24V 3,0kW	15.133.664	16.906.509	-	16.908.861	16.908.194	16.906.510	-
A	**11.216.301**	AMJ4769 12V 1,6kW	-	16.905.699	-	16.361.828	16.908.630	-	16.907.940
A	**11.216.305**	AMJ4773 24V 2,2kW	-	16.905.163	-	16.361.898	16.908.630	-	16.907.940
B	**11.216.317**	AMJ5734 48V 2,0kW	16.283.367	16.905.263	-	16.908.965	16.905.163	-	16.908.968
D	**11.216.319**	AMK5519 24V 3,0kW	16.281.746	16.905.263	-	16.906.047	16.906.025	16.905.536	16.906.410

8	9	10	11	12	13	14	15	16
16.282.279	-	16.908.562	16.906.463	-	16.283.218	-	-	-
16.915.005	16.908.424	16.908.425	16.908.309	-	16.908.426	16.906.678	16.908.427	-
16.282.217	-	16.906.472	16.908.051	-	16.281.771	-	-	16.908.399
16.908.450	-	16.908.530	16.908.260	-	15.133.052	15.421.058	16.915.592	-
16.908.413	16.908.225	16.908.228	16.908.723	-	16.908.229	-	16.915.601	-
16.282.178	-	-	16.906.026	-	16.908.403	-	16.908.404	-
16.282.191	-	-	16.905.535	-	16.908.300	-	16.908.299	-
16.282.191	-	-	16.905.535	-	16.908.300	-	16.908.299	-
16.282.192	-	-	16.906.486	-	16.908.374	-	16.908.299	-
16.282.190	-	-	16.905.677	-	16.908.297	-	16.908.299	-
16.282.192	-	-	16.906.486	-	16.908.374	-	16.908.299	-
16.282.191	-	-	16.905.535	-	16.908.300	-	16.908.299	-
16.282.107	-	-	16.906.054	16.904.471	16.908.405	-	16.906.385	-
16.282.050	-	16.907.601	16.907.602	16.902.008	16.281.771	-	-	-
16.282.049	-	16.907.599	16.907.600	16.902.008	16.281.771	-	-	-
16.282.778	-	-	16.905.681	-	16.906.458	-	16.906.290	-
16.282.779	-	-	16.905.677	-	16.908.276	-	16.906.290	-
16.282.819	-	-	16.905.681	-	16.906.458	-	16.906.290	-
16.282.820	-	-	16.905.677	-	16.908.276	-	16.906.290	-
16.908.202	16.908.193	16.908.196	16.908.195	16.902.111	16.908.197	16.908.199	16.908.198	-
16.908.897	-	16.908.898	-	-	15.133.414	-	-	-
16.282.334	-	16.908.729	16.906.463	16.902.661	16.908.966	-	-	-
16.282.049	-	16.908.598	16.908.599	-	16.283.753	-	-	-
16.280.897	-	16.906.471	16.906.466	16.902.153	16.283.126	-	-	-
16.282.256	-	16.906.472	16.908.051	-	16.908.490	-	-	-
16.282.285	-	16.908.249	16.906.466	-	16.281.720	-	-	-
16.908.685	16.908.686	16.908.688	16.908.687	16.915.602	16.908.689	16.908.690	16.908.198	-
16.280.905	-	-	16.906.026	-	16.906.206	-	16.906.027	-
16.908.809	16.908.193	16.908.810	16.908.811	16.908.812	16.908.813	16.908.814	16.908.815	-
16.280.895	-	16.906.471	16.906.466	-	16.908.529	-	-	-
16.280.503	-	-	16.906.026	-	16.906.206	15.421.058	16.915.597	-
16.908.450	-	16.908.530	16.908.260	-	15.133.052	15.421.058	16.915.592	-
16.280.287	-	-	16.906.021	-	16.906.235	-	16.906.867	16.908.218
16.280.286	-	-	16.906.096	-	16.906.236	-	16.906.867	16.908.506
16.282.482	-	-	16.906.026	-	16.906.206	-	16.906.027	-
16.908.450	-	16.908.530	16.908.260	16.902.220	15.133.052	15.421.058	16.915.592	-
16.282.256	-	16.906.472	16.906.463	16.902.157	16.283.126	-	-	-
16.280.503	-	-	16.906.026	16.902.100	16.908.572	-	16.906.385	-
16.282.027	-	16.907.598	16.906.466	-	16.283.752	-	-	-
16.282.013	-	16.908.249	16.906.466	-	16.283.077	-	-	-
16.280.988	-	16.908.249	16.906.466	-	16.283.077	-	-	-
16.282.050	-	16.906.471	16.906.466	-	16.281.771	-	-	-
16.282.050	-	16.906.471	16.906.466	16.902.008	16.908.303	-	-	-
16.282.049	-	16.906.472	16.908.051	-	16.281.771	-	-	-
16.282.014	-	16.908.670	16.906.463	-	16.283.078	-	-	-
16.282.012	-	16.908.629	16.906.463	-	16.283.078	-	-	-
16.282.049	-	16.906.472	16.906.463	16.902.016	16.908.303	-	-	-
16.282.049	-	16.906.472	16.908.051	-	16.281.779	-	-	-
16.282.240	16.908.420	16.908.860	16.906.545	-	16.908.422	16.908.423	16.906.677	-
16.282.049	-	16.906.472	16.908.051	16.902.008	16.281.771	-	-	-
16.908.907	16.908.225	16.908.228	16.908.723	-	16.908.229	16.908.222	16.915.601	-
16.282.244	-	-	16.906.096	-	16.908.854	-	16.906.591	-
16.282.254	-	-	16.906.096	-	16.908.854	-	16.906.591	-
16.282.330	16.908.730	16.908.732	16.908.731	-	16.908.733	-	16.908.734	-
16.282.334	-	16.908.729	16.906.463	-	16.283.078	-	-	-
16.280.896	-	16.906.472	16.908.051	-	16.908.529	-	-	-
16.280.905	-	-	16.906.026	16.902.491	16.908.977	15.421.058	16.907.609	-
16.280.716	-	-	16.905.677	-	16.908.018	-	16.906.290	-
16.280.717	-	-	16.906.457	-	16.908.019	-	16.906.290	-
16.282.079	-	16.420.476	16.906.466	-	16.283.218	-	-	-
16.282.279	-	16.908.562	16.906.463	-	16.283.218	-	-	-
16.282.342	-	16.908.249	16.906.466	-	16.908.869	-	-	-
16.282.343	16.908.424	16.908.979	16.908.862	-	16.908.426	16.906.678	16.908.427	-
16.282.342	-	16.908.249	16.906.466	16.902.157	16.907.693	-	-	-
16.282.440	-	16.915.111	16.907.600	-	16.283.988	-	-	-
16.282.387	-	-	16.906.486	-	16.908.374	-	16.908.299	-
16.280.905	-	-	16.906.026	-	16.908.660	-	16.906.027	-

FIG.			1	2	3	4	5	6	7
B	**11.216.327**	AMJ4778 24V 2,0kW	15.130.734	16.905.263	-	16.907.284	16.905.163	-	16.906.356
D	**11.216.350**	AMK2611 24V 1,0kW	15.133.652	16.906.382	16.915.589	16.908.941	16.908.942	16.905.792	16.908.943
F	**11.216.356**	AMK2613 24V 1,5kW	15.133.652	16.906.382	16.915.589	16.908.955	16.908.956	16.905.792	16.908.975
A	**11.216.359**	AMJ5748 24V 2,2kW	16.283.507	16.905.263	-	16.361.805	16.905.163	-	16.908.728
A	**11.216.360**	AMJ5746 24V 2,2kW	-	16.905.699	-	16.906.461	15.120.087	-	16.906.462
A	**11.216.361**	AMJ5747 12V 1,6kW	-	16.905.699	-	16.906.465	15.120.087	-	16.906.462
A	**11.216.363**	AMJ4779 12V 1,5kW	-	-	-	16.361.849	16.908.630	-	16.907.168
B	**11.216.368**	AMJ5750 12V 1,5kW	16.283.516	16.905.263	-	16.908.792	16.905.163	16.905.536	16.908.793
D	**11.216.369**	AMK2614 24V 0,9kW	15.133.721	-	16.915.591	16.907.156	16.907.147	-	16.907.415
D	**11.216.375**	AMK2615 24V 0,9kW	-	-	16.915.591	16.907.748	16.907.147	-	16.907.749
D	**11.216.376**	AMK2616 24V 0,9kW	15.133.758	16.906.382	16.915.591	16.907.146	16.907.147	16.908.290	16.907.415
A	**11.216.380**	AMJ5753 24V 2,2kW	16.283.442	16.905.263	-	16.361.805	16.908.630	-	16.908.728
A	**11.216.383**	AMJ4783 12V 1,6kW	16.908.438	16.905.699	-	16.908.439	16.905.163	-	16.906.094
B	**11.216.384**	AMJ4784 24V 0,6kW	-	-	-	16.361.564	16.905.163	-	16.905.534
B	**11.216.385**	AMJ5754 24V 2,05kW	15.131.188	16.905.699	-	16.906.294	16.905.163	-	16.906.095
B	**11.216.386**	AMJ5755 24V 1,8kW	15.131.188	16.905.699	-	16.906.287	16.905.163	-	16.906.094
B	**11.216.394**	AMJ5756 12V 1,5kW	15.133.741	16.906.075	-	16.906.151	16.905.163	-	16.906.150
B	**11.216.395**	AMJ5757 24V 2,0kW	15.133.741	16.906.075	-	16.906.149	16.905.163	-	16.906.150
A	**11.216.400**	AMJ4787 12V 1,6kW	16.283.748	16.905.263	-	16.907.189	16.908.630	-	16.907.190
A	**11.216.401**	AMJ4788 24V 2,2kW	16.283.748	16.905.263	-	16.907.192	16.908.630	-	16.907.190
B	**11.216.402**	AMJ4789 12V 0,7kW	-	-	-	16.361.369	16.905.163	-	16.907.053
B	**11.216.403**	AMJ4790 24V 0,9kW	-	-	-	16.361.376	16.905.163	-	16.907.053
I	**11.216.404**	AMT4659 48V 11,5kW	16.908.342	16.908.189	-	16.908.201	16.908.194	16.908.191	-
A	**11.216.410**	AMJ5761 12V 1,6kW	-	16.905.699	-	16.361.677	16.908.474	-	16.906.802
F	**11.216.413**	AMK2620 24V 1,5kW	15.133.766	16.906.382	16.915.591	16.907.314	16.908.956	16.908.290	16.907.315
E	**11.216.417**	AMK4651 24V 3,0kW	16.283.970	16.908.546	15.133.378	16.361.368	16.908.547	-	16.907.069
A	**11.216.422**	AMJ5763 24V 2,2kW	-	16.905.699	-	16.361.086	16.908.080	-	16.906.150
D	**11.216.424**	AMK4652 12V 1,6kW	16.283.657	-	-	16.362.028	16.905.163	-	16.907.263
D	**11.216.425**	AMK4653 24V 2,0kW	16.283.657	-	-	16.362.029	16.905.163	-	16.907.263
D	**11.216.426**	AMK5527 24V 3,0kW	-	16.906.382	-	16.906.047	16.906.025	-	16.915.594
D	**11.216.431**	AMK5528 24V 3,0kW	16.283.010	16.905.953	-	16.906.696	16.906.025	-	16.906.697
A	**11.216.441**	AMJ4794 24V 2,0kW	-	-	-	16.362.050	16.908.630	-	16.907.168
A	**11.216.445**	AMJ5766 12V 1,6kW	-	16.905.699	-	16.361.677	16.908.474	-	16.906.802
A	**11.216.446**	AMJ5767 24V 2,2kW	-	16.905.699	-	16.361.793	16.908.474	-	16.906.802
B	**11.216.447**	AMJ5768 24V 2,1kW	15.131.234	16.905.263	-	16.907.361	16.905.163	16.905.792	16.907.363
D	**11.216.449**	AMK2622 24V 0,9kW	15.133.848	16.906.382	16.915.591	16.907.146	16.907.147	16.908.290	16.907.415
A	**11.216.455**	AMJ5769 12V 1,6kW	16.283.615	16.905.263	-	16.906.989	15.120.087	16.905.536	16.908.087
A	**11.216.456**	AMJ5770 24V 2,2kW	16.283.615	16.905.263	-	16.906.989	15.120.087	16.905.536	16.908.087
B	**11.216.459**	AMJ5771 12V 2,1kW	16.283.442	16.906.382	-	16.908.895	16.905.163	-	16.908.896
A	**11.216.479**	AMJ5772 24V 2,2kW	-	16.905.699	-	16.361.086	16.908.080	-	16.906.150
A	**11.216.484**	AMJ4799 12V 1,6kW	-	16.905.699	-	16.362.120	16.908.630	-	16.915.448
D	**11.216.486**	AMK5531 24V 3,0kW	-	16.906.382	-	16.906.047	16.906.025	-	16.915.594
B	**11.216.496**	AMJ4501 12V 2,1kW	-	-	-	16.361.254	16.905.163	-	16.906.864
B	**11.216.497**	AMJ4502 12V 1,6kW	-	-	-	16.361.426	16.905.163	-	16.908.275
B	**11.216.498**	AMJ5775 12V 2,1kW	16.283.442	16.906.382	-	16.908.895	16.905.163	-	16.908.896
A	**11.216.499**	AMJ4503 12V 1,6kW	-	16.905.699	-	16.361.828	16.905.611	-	16.908.275
A	**11.216.500**	AMJ4504 12V 1,5kW	-	-	-	16.361.849	16.908.630	-	16.907.168
B	**11.216.501**	AMJ5776 12V 2,1kW	16.283.369	16.906.382	-	16.908.895	16.908.899	-	16.908.896
B	**11.216.502**	AMJ4505 24V 2,1kW	-	-	-	16.361.255	16.905.163	-	16.906.864
B	**11.216.503**	AMJ4506 24V 2,0kW	-	-	-	16.361.431	16.905.163	-	16.908.275
A	**11.216.504**	AMJ4507 24V 2,0kW	-	-	-	16.362.050	16.908.630	-	16.907.168
D	**11.216.505**	AMK4657 12V 1,6kW	16.283.657	-	-	16.362.028	16.905.163	-	16.907.263
D	**11.216.506**	AMK4656 24V 2,0kW	16.283.657	-	-	16.362.029	16.905.163	-	16.907.263
D	**11.216.507**	AMK5532 48V 3,0kW	16.283.008	16.905.263	-	16.906.549	16.906.025	16.905.792	16.906.363
D	**11.216.508**	AMK5533 48V 3,0kW	-	16.905.699	-	16.361.108	16.906.025	-	16.908.078
E	**11.216.509**	AMK4658 24V 3,0kW	16.283.572	16.908.546	-	16.362.152	16.907.608	-	16.915.593
I	**11.216.510**	AMT4664 36V 6,9kW	16.908.683	16.908.189	-	16.908.684	16.908.194	16.908.191	-
B	**11.216.511**	AMJ5777 48V 2,0kW	15.130.734	16.905.263	-	16.906.485	16.905.163	-	16.906.356
D	**11.216.514**	AMK5534 24V 3,0kW	-	16.905.699	-	16.361.662	16.906.025	-	16.908.078
B	**11.216.516**	AMJ5778 24V 2,1kW	15.133.350	16.905.263	-	16.361.640	16.908.630	-	16.906.140
B	**11.216.518**	AMJ5779 24V 2,1kW	15.130.734	16.905.263	-	16.907.285	16.905.163	-	16.907.286
F	**11.216.521**	AMK2623 24V 1,5kW	15.133.967	16.906.382	16.915.591	16.907.314	16.908.956	16.908.290	16.907.315
G	**11.216.533**	AMP4321 24V 1,0kW	15.131.595	16.908.288	-	16.907.700	16.906.672	16.907.701	-
G	**11.216.534**	AMP4525 24V 2,0kW	15.131.595	16.908.288	-	16.907.702	16.906.672	16.907.701	-
F	**11.216.539**	AMK5539 24V 3,0kW	-	16.905.699	-	16.362.174	16.907.608	-	16.915.593
A	**11.216.541**	AMJ5781 24V 2,2kW	16.283.549	16.905.263	-	16.908.144	16.908.630	-	16.908.143
B	**11.216.551**	AMJ4509 24V 1,9kW	-	16.905.699	-	16.362.184	16.905.163	-	16.906.454

16.282.362	-	-	16.906.457	-	16.906.458	-	16.906.290	-
16.282.351	-	-	16.908.709	-	16.908.944	15.421.544	16.908.945	-
16.282.373	-	16.908.957	16.908.958	-	15.133.545	15.421.058	16.915.590	-
16.282.375	-	16.908.729	16.906.463	16.904.864	16.283.126	-	-	-
16.282.379	-	16.908.206	16.906.463	-	16.281.771	-	-	-
16.282.378	-	16.908.205	16.906.466	-	16.281.771	-	-	-
16.907.169	-	16.907.171	16.906.466	-	16.907.170	-	-	-
16.282.319	-	-	16.906.455	-	16.906.253	-	16.908.794	-
16.282.394	-	-	16.908.709	-	16.907.149	15.421.544	16.908.945	-
16.282.528	-	-	16.908.709	-	16.907.750	15.421.544	16.908.945	-
16.282.394	-	-	16.908.709	-	16.907.149	15.421.544	16.908.945	-
16.282.334	-	16.908.729	16.906.463	16.902.661	16.908.966	-	-	-
16.282.057	-	16.908.249	16.906.466	-	16.283.289	-	-	-
16.282.198	-	-	16.908.709	-	16.908.981	-	16.906.290	-
16.280.542	-	-	16.908.852	-	16.906.257	-	16.906.293	-
16.280.543	-	-	16.905.535	-	16.906.258	-	16.906.286	-
16.280.672	-	-	16.905.677	16.903.093	16.908.276	-	16.906.284	-
16.280.665	-	-	16.905.535	16.903.078	16.906.258	-	16.906.284	-
16.282.405	-	16.906.470	16.906.466	-	16.283.753	-	-	16.907.191
16.282.406	-	16.907.193	16.906.463	-	16.283.753	-	-	16.908.399
16.282.069	-	-	16.905.677	16.904.908	16.908.276	-	16.906.542	-
16.282.087	-	-	16.906.457	16.904.909	16.906.458	-	16.906.542	-
16.908.202	16.908.193	16.908.196	16.908.195	16.902.111	16.908.197	16.908.199	16.908.198	-
16.280.895	-	16.906.471	16.906.466	-	16.908.529	-	-	16.907.939
16.907.316	-	16.908.957	16.908.958	-	15.133.966	15.421.058	16.915.590	-
16.282.421	-	16.907.070	16.908.260	-	15.133.052	15.421.058	16.915.592	-
16.282.093	-	16.906.472	16.906.463	16.902.016	16.908.966	-	-	-
16.282.417	-	-	16.908.712	16.902.822	16.907.264	-	16.908.711	-
16.282.418	-	-	16.908.709	16.902.998	16.907.265	-	16.908.711	-
16.280.939	-	-	16.906.026	-	16.908.660	-	16.906.027	-
16.282.422	-	-	16.906.026	-	16.908.660	-	16.906.698	-
16.907.181	-	16.907.182	16.906.463	-	16.907.170	-	-	-
16.282.436	-	16.906.471	16.906.466	-	16.908.529	-	-	16.907.144
16.282.437	-	16.906.472	16.906.463	-	16.908.529	-	-	16.907.145
16.282.471	-	-	16.907.288	16.904.783	16.907.364	-	16.908.217	16.907.362
16.282.394	-	-	16.908.709	-	16.907.149	15.421.544	16.908.945	-
16.282.442	-	16.906.471	16.906.466	16.903.343	16.908.303	-	-	16.907.052
16.282.204	-	16.906.472	16.906.463	16.903.343	16.908.303	-	-	16.907.360
16.908.897	-	16.907.230	-	16.907.232	15.133.903	-	-	-
16.282.454	-	16.906.472	16.906.463	-	16.907.229	-	-	-
16.282.470	-	16.907.619	16.907.602	-	16.283.077	-	-	-
16.280.939	-	-	16.906.026	16.904.472	16.908.231	-	16.908.232	-
16.282.023	-	-	16.906.865	-	16.906.866	-	16.906.867	-
16.282.113	-	-	16.905.677	16.904.968	16.908.276	-	16.906.284	-
16.908.897	-	16.908.898	-	-	15.133.414	-	-	-
16.282.342	-	16.908.249	16.906.466	-	16.908.869	-	-	-
16.907.169	-	16.907.171	16.906.466	-	16.907.170	-	-	-
16.908.897	-	16.907.230	-	16.907.232	16.907.231	-	-	-
16.282.024	-	-	16.906.021	-	16.906.868	-	16.906.867	-
16.282.114	-	-	16.906.457	16.904.969	16.906.458	-	16.906.284	-
16.907.181	-	16.907.182	16.906.463	-	16.907.170	-	-	-
16.282.417	-	-	16.908.712	16.902.822	16.907.264	-	16.908.711	-
16.282.418	-	-	16.908.709	16.902.998	16.907.265	-	16.908.711	-
16.280.784	-	-	16.906.550	-	16.906.551	-	16.906.027	-
16.280.922	-	-	16.906.550	-	16.906.551	-	16.906.027	-
16.282.421	-	16.907.070	16.908.260	-	15.133.052	-	16.907.611	-
16.908.685	16.908.686	16.908.688	16.908.687	16.915.602	16.908.689	16.908.690	16.908.198	-
16.280.766	-	-	16.906.486	-	16.906.487	-	16.906.290	-
16.282.482	-	-	16.906.026	16.902.993	16.906.206	-	16.906.385	-
16.282.254	-	-	16.906.865	-	16.908.854	-	16.906.591	16.907.622
16.282.474	-	-	16.907.288	-	16.907.287	-	16.906.591	-
16.907.316	-	16.908.957	16.908.958	-	15.133.966	15.421.058	16.915.590	-
16.282.495	16.915.598	16.908.418	16.908.417	-	16.908.928	-	16.908.489	-
16.282.496	16.915.598	16.908.418	16.908.417	-	16.908.928	-	16.908.489	-
16.282.498	-	16.907.616	16.908.260	-	15.132.179	-	16.907.611	16.907.618
16.280.898	-	16.906.472	16.906.463	-	16.283.126	-	-	-
16.282.502	-	-	16.906.096	-	16.906.587	-	16.906.591	-

FIG.			1	2	3	4	5	6	7
D	**11.216.552**	AMK5542 24V 3,0kW	-	16.905.699	-	16.361.662	16.907.612	-	16.908.078
G	**11.216.555**	AMP4526 24V 3,0kW	15.131.613	16.906.671	-	16.360.895	16.906.672	16.915.599	-
A	**11.216.560**	AMJ5784 12V 1,6kW	-	16.908.630	-	16.362.295	16.908.080	-	16.907.620
B	**11.216.572**	AMJ5787 24V 2,0kW	15.130.602	16.905.263	-	16.905.553	16.908.630	-	16.906.454
B	**11.216.573**	AMJ5788 12V 1,5kW	15.130.602	16.905.263	-	16.905.556	16.908.630	-	16.906.454
A	**11.216.574**	AMJ5789 24V 2,2kW	-	16.905.699	-	16.361.086	16.908.080	-	16.907.054
A	**11.216.575**	AMJ5790 12V 1,6kW	-	16.905.699	-	16.361.087	16.908.080	-	16.907.054
D	**11.216.577**	AMK5543 24V 3,0kW	16.281.690	16.906.774	16.281.728	16.908.976	16.907.612	16.908.290	16.906.699
B	**11.216.584**	AMJ5791 24V 2,1kW	16.283.367	16.906.517	-	16.361.640	16.908.630	-	16.906.140
F	**11.216.587**	AMK5544 24V 3,0kW	-	16.905.699	-	16.362.174	16.907.608	-	16.915.593
E	**11.216.589**	AMK4661 24V 3,0kW	16.283.233	16.907.807	15.133.378	16.362.557	16.907.608	-	16.908.258
G	**11.216.591**	AMP4529 80V 3,0kW	15.131.595	16.908.946	-	16.907.604	16.906.672	-	-
G	**11.216.594**	AMP4530 48V 3,7kW	15.131.613	16.906.671	-	16.360.962	16.906.672	16.915.599	-
G	**11.216.596**	AMP4531 24V 4,1kW	15.131.613	16.906.671	-	16.360.969	16.908.194	16.915.599	-
B	**11.216.598**	AMJ4510 12V 1,6kW	-	16.905.699	-	16.360.382	16.905.163	-	16.915.449
A	**11.216.608**	AMJ5796 12V 1,6kW	-	16.905.699	-	16.361.674	16.908.630	-	16.906.150
A	**11.216.615**	AMJ4513 12V 1,6kW	-	16.905.699	-	16.361.307	16.908.630	-	16.915.447
A	**11.216.616**	AMJ4514 12V 1,6kW	-	16.905.699	-	16.361.828	16.908.630	-	16.907.940
H	**11.216.617**	AMT2627 48V 4,5kW	16.915.310	16.908.189	-	16.915.311	16.908.194	-	-
A	**11.216.623**	AMJ5798 24V 2,2kW	16.283.748	16.906.774	-	16.361.022	15.120.087	-	16.906.775
D	**11.216.624**	AMK5549 24V 3,0kW	16.281.763	16.906.517	-	16.907.809	16.907.612	-	16.915.594
A	**11.216.633**	AMJ5803 24V 2,2kW	-	16.905.699	-	16.361.645	16.908.630	-	16.907.054
A	**11.216.635**	AMJ5804 48V 2,2kW	-	16.905.699	-	16.362.579	16.908.630	-	16.907.940
A	**11.216.639**	AMJ4519 12V 1,6kW	-	16.905.699	-	16.362.553	16.905.163	-	16.907.725
A	**11.216.640**	AMJ4520 12V 1,6kW	-	16.905.699	-	16.362.571	16.905.163	-	16.915.447
A	**11.216.644**	AMJ4522 12V 1,6kW	-	16.908.630	-	16.362.577	16.908.474	-	16.907.620
F	**11.216.645**	AMK2627 24V 3,0kW	-	16.905.699	16.915.589	16.362.581	16.907.608	-	-
A	**11.216.646**	AMJ4523 24V 2,2kW	-	16.905.699	-	16.361.898	16.908.630	-	16.907.940
A	**11.216.654**	AMJ5809 48V 2,2kW	-	16.907.943	-	16.362.588	16.908.630	-	16.915.447
A	**11.216.658**	AMJ5811 24V 2,2kW	-	16.905.699	-	16.361.086	16.908.474	-	16.907.054
F	**11.216.663**	AMK2629 24V 1,5kW	15.133.652	16.906.382	16.915.589	16.908.955	16.908.956	16.905.792	16.908.975
D	**11.216.664**	AMK2630 24V 1,0kW	15.133.652	16.906.382	16.915.589	16.908.941	16.908.942	16.905.792	16.908.943
E	**11.216.667**	AMK4666 24V 3,0kW	16.283.233	16.908.546	15.133.378	16.361.547	16.907.608	-	16.908.258
A	**11.216.676**	AMJ5815 12V 1,6kW	16.285.314	16.906.774	-	16.906.986	15.120.087	16.905.536	16.908.087
A	**11.216.677**	AMJ5816 24V 2,2kW	16.285.314	16.906.774	-	16.906.986	15.120.087	16.905.536	16.908.087
A	**11.216.678**	AMJ5817 24V 2,2kW	-	16.907.943	-	16.362.628	16.908.474	-	16.907.954
A	**11.216.679**	AMJ4526 24V 2,0kW	-	16.907.943	-	16.361.086	16.908.474	-	16.906.150
A	**11.216.680**	AMJ5818 24V 1,4kW	-	16.907.943	-	16.362.636	16.908.474	-	16.915.249
A	**11.216.681**	AMJ5819 12V 1,6kW	-	16.907.943	-	16.362.631	16.908.474	-	16.907.954
B	**11.216.699**	AMJ4539 12V 1,5kW	16.285.458	16.905.699	-	16.362.803	16.908.474	-	16.906.150
B	**11.216.700**	AMJ4540 24V 2,0kW	16.285.458	16.905.699	-	16.362.802	16.908.474	-	16.906.150
B	**11.216.702**	AMJ4541 24V 2,0kW	16.285.457	16.905.699	-	16.362.802	16.908.474	-	16.906.150
B	**11.216.703**	AMJ4542 12V 1,5kW	16.285.457	16.905.699	-	16.362.803	16.908.474	-	16.906.150
A	**11.216.708**	AMJ5822 12V 1,6kW	-	16.905.699	-	16.361.677	16.908.630	-	16.906.802
E	**11.216.719**	AMK4673 24V 3,0kW	-	16.915.422	-	16.363.104	16.907.608	-	16.300.125
B	**11.216.723**	AMJ4548 12V 1,5kW	-	-	-	16.362.797	16.908.630	-	16.915.384
B	**11.216.724**	AMJ4549 24V 2,0kW	-	-	-	16.362.798	16.908.630	-	16.915.233
A	**11.216.728**	AMJ4552 12V 1,6kW	-	16.905.699	-	16.362.553	16.908.630	-	16.907.725
A	**11.216.729**	AMJ4553 12V 1,6kW	-	16.907.943	-	16.362.829	16.908.630	-	16.906.462
A	**11.216.730**	AMJ4554 24V 2,2kW	-	16.907.943	-	16.362.828	16.908.630	-	16.906.462
E	**11.216.739**	AMK4676 24V 3,0kW	16.283.572	16.908.546	-	16.362.152	16.907.608	-	16.915.593
A	**11.216.752**	AMJ5824 24V 2,2kW	-	16.907.943	-	16.362.828	16.908.630	-	16.915.624
A	**11.216.753**	AMJ5825 12V 1,6kW	-	16.907.943	-	16.362.829	16.908.630	-	16.915.624
G	**11.216.755**	AMP4537 24V 3,0kW	15.133.264	16.906.671	-	16.915.340	16.906.672	16.915.599	-
F	**11.216.769**	AMK2632 24V 1,5kW	16.285.063	16.906.774	-	16.361.193	16.907.608	-	16.915.593
B	**11.216.772**	AMJ4571 24V 0,9kW	16.285.586	16.905.699	-	16.362.891	16.908.474	-	16.915.249
B	**11.216.773**	AMJ4572 12V 0,7kW	16.285.586	16.905.699	-	16.362.892	16.908.474	-	16.915.249
E	**11.216.776**	AMK5554 24V 3,0kW	16.281.690	16.906.517	15.133.378	16.915.394	16.907.608	16.905.792	16.908.258
E	**11.216.781**	AMK4678 24V 3,0kW	16.283.970	16.908.546	15.133.378	16.361.368	16.908.547	-	16.907.069
A	**11.216.783**	AMJ4573 12V 1,6kW	-	16.905.699	-	16.362.120	16.908.630	-	16.906.094
B	**11.216.784**	AMJ4574 12V 1,6kW	-	16.905.699	-	16.360.382	16.905.163	-	16.906.414
A	**11.216.785**	AMJ4575 12V 1,6kW	-	16.905.699	-	16.362.571	16.905.163	-	16.906.873
A	**11.216.787**	AMJ5833 48V 2,2kW	-	16.907.943	-	16.362.588	16.908.630	-	16.906.873
E	**11.216.788**	AMK4679 24V 3,0kW	16.283.233	16.908.546	15.133.378	16.361.547	16.907.608	-	16.908.258
A	**11.216.789**	AMJ4576 12V 1,6kW	16.908.438	16.905.699	-	16.361.699	15.120.087	-	16.908.714
A	**11.216.790**	AMJ4577 12V 1,6kW	-	16.905.699	-	16.361.828	16.908.630	-	16.907.940
A	**11.216.791**	AMJ4578 12V 1,6kW	-	16.905.699	-	16.361.828	16.908.630	-	16.907.940

8	9	10	11	12	13	14	15	16
16.280.939	-	-	16.906.026	-	16.908.660	-	16.906.698	-
16.907.603	16.906.675	16.906.674	16.906.673	-	16.906.676	16.906.678	16.906.677	-
16.282.521	-	16.906.471	16.907.602	-	16.908.529	-	-	16.907.621
16.280.665	-	-	16.906.457	-	16.906.458	-	16.906.290	16.907.694
16.280.672	-	-	16.906.455	-	16.906.253	-	16.906.290	16.907.695
16.282.093	-	16.906.472	16.907.600	-	16.907.229	-	-	16.907.696
16.282.172	-	16.906.471	16.907.602	-	16.907.229	-	-	16.907.697
16.280.905	-	-	16.906.026	16.902.491	16.908.977	15.421.058	16.907.609	-
16.282.605	-	-	16.906.865	-	16.906.255	-	16.907.835	-
16.282.498	-	16.907.616	16.908.260	-	15.132.179	-	16.907.611	-
16.907.808	-	16.908.530	16.908.260	-	15.133.052	15.421.058	16.915.592	-
16.280.826	16.906.675	16.907.606	16.907.605	-	16.906.676	16.906.678	16.906.677	-
16.907.739	16.906.675	16.907.741	16.907.740	-	16.906.676	16.906.678	16.906.677	-
16.907.742	16.908.424	16.907.744	16.907.743	-	16.908.426	16.906.678	16.908.427	-
16.282.547	-	-	16.905.677	-	16.907.720	-	16.908.794	-
16.282.275	-	16.906.471	16.907.602	16.902.894	16.283.126	-	-	-
16.282.013	-	16.908.249	16.906.466	-	16.283.951	-	-	-
16.282.568	-	16.908.249	16.906.466	-	16.283.530	-	-	-
16.908.907	16.908.225	16.908.228	16.908.723	-	16.908.229	16.908.222	16.915.601	-
16.280.898	-	16.906.472	16.906.463	16.908.281	16.281.771	-	-	16.907.965
16.915.007	-	-	16.906.026	-	16.906.206	-	16.906.027	-
16.282.256	-	16.906.472	16.907.600	-	16.908.490	-	-	-
16.282.582	-	16.907.846	16.907.847	-	16.283.988	-	-	-
16.282.569	-	16.907.662	16.907.602	-	16.907.726	-	-	-
16.282.027	-	16.907.766	16.907.602	-	16.283.078	-	-	-
16.282.581	-	16.907.780	16.907.602	-	16.908.529	-	-	-
16.907.981	-	16.907.982	16.907.983	-	15.132.499	-	16.915.592	-
16.282.380	-	16.915.111	16.907.600	16.902.157	16.907.942	-	-	-
16.282.594	-	16.907.846	16.907.847	-	16.283.078	-	-	-
16.282.454	-	16.907.821	16.907.600	-	16.907.229	-	-	-
16.282.373	-	16.908.957	16.908.958	-	15.133.545	15.421.058	16.915.590	-
16.282.351	-	-	16.908.709	-	16.908.944	15.421.544	16.908.945	-
16.907.845	-	16.908.530	16.908.260	-	15.133.052	15.421.058	16.915.592	-
16.282.630	-	16.906.471	16.906.466	16.908.281	16.908.303	-	-	16.907.052
16.282.632	-	16.906.472	16.908.051	16.908.281	16.908.303	-	-	16.907.360
16.282.617	-	16.907.956	16.907.600	-	16.907.955	-	-	16.915.222
16.282.625	-	16.907.193	16.907.600	16.911.843	16.907.229	-	-	-
16.282.631	-	16.907.599	16.907.600	-	16.907.229	-	-	-
16.282.621	-	16.907.957	16.907.602	-	16.907.955	-	-	16.915.223
16.282.779	-	-	16.905.677	-	16.908.276	-	16.908.794	-
16.282.778	-	-	16.906.457	-	16.908.276	-	16.908.794	-
16.282.778	-	-	16.906.457	-	16.906.458	-	16.906.290	-
16.282.779	-	-	16.906.455	-	16.906.253	-	16.906.290	-
16.282.428	-	16.906.471	16.906.466	-	16.908.529	-	-	16.907.939
16.915.806	-	16.915.171	16.907.983	-	15.133.052	-	16.907.611	-
16.282.008	-	-	16.905.677	16.903.227	16.908.276	-	16.906.542	-
16.282.009	-	-	16.906.457	16.903.227	16.906.458	-	16.906.542	-
16.282.569	-	16.907.662	16.907.602	-	16.907.726	-	-	-
16.282.785	-	16.915.176	16.907.602	-	16.285.331	-	-	-
16.282.784	-	16.915.177	16.907.600	-	16.285.331	-	-	-
16.282.421	-	16.907.070	16.908.260	-	15.133.052	-	16.907.611	-
16.282.801	-	16.907.956	16.907.600	-	16.285.331	-	-	-
16.282.800	-	16.907.957	16.907.602	-	16.285.331	-	-	-
16.915.600	16.906.675	16.906.674	16.906.673	-	16.906.676	16.906.678	16.906.677	-
16.915.511	-	16.915.512	16.908.260	16.912.034	15.133.466	-	15.421.136	-
16.282.819	-	-	16.906.457	-	16.906.458	-	16.908.794	-
16.282.820	-	-	16.905.677	-	16.908.276	-	16.908.794	-
16.915.395	-	16.907.616	16.908.260	-	15.133.052	15.421.058	16.915.592	-
16.282.421	-	16.907.070	16.908.260	-	15.133.052	15.421.058	16.915.592	-
16.282.470	-	16.907.619	16.907.602	-	16.283.077	-	-	-
16.282.547	-	-	16.905.677	-	16.907.720	-	16.908.794	-
16.282.027	-	16.907.766	16.907.602	-	16.283.078	-	-	-
16.282.594	-	16.907.846	16.907.847	-	16.283.078	-	-	-
16.907.845	-	16.908.530	16.908.260	-	15.133.052	15.421.058	16.915.592	-
16.282.285	-	16.908.249	16.906.466	-	16.281.720	-	-	-
16.282.342	-	16.908.249	16.906.466	16.902.157	16.907.693	-	-	-
16.282.588	-	16.907.941	16.907.602	-	16.283.988	-	-	-

FIG.		1	2	3	4	5	6	7
A	**11.216.792**	AMJ4579 24V 2,2kW	-	16.905.699	-	16.361.898	16.908.630	-	16.907.940
A	**11.216.793**	AMJ5834 48V 2,2kW	-	16.905.699	-	16.362.579	16.908.630	-	16.907.940
F	**11.216.804**	AMK5557 24V 3,0kW	-	16.915.422	-	16.362.936	16.907.612	-	16.915.423
B	**11.216.811**	AMJ4582 24V 2,2kW	15.130.734	16.906.517	-	16.915.608	16.915.609	-	16.915.610
B	**11.216.813**	AMJ5837 24V 2,2kW	-	16.905.699	-	16.363.054	16.915.609	-	16.906.454
G	**11.216.823**	AMP5618 24V 5,5kW	15.131.613	16.906.671	-	16.360.978	16.908.194	16.915.599	-
B	**11.216.824**	AMJ4583 12V 1,6kW	-	16.905.699	-	16.360.382	16.905.611	-	16.906.414
E	**11.216.831**	AMK4684 24V 1,5kW	15.133.652	16.906.382	16.915.589	16.915.807	16.908.956	16.905.792	16.908.975
A	**11.216.833**	AMJ4585 24V 2,2kW	-	16.908.219	-	16.361.307	16.908.630	-	16.915.447
A	**11.216.835**	AMJ5842 24V 2,2kW	-	16.907.943	-	16.363.052	16.908.474	-	16.906.389
A	**11.216.857**	AMJ5847 24V 2,2kW	-	16.907.943	-	16.361.086	16.908.474	-	16.906.150
A	**11.216.858**	AMJ5848 80V 1,5kW	-	16.905.699	-	16.363.004	16.905.163	-	16.906.414
D	**11.216.865**	AMK5562 24V 3,0kW	16.283.241	16.905.263	-	16.906.047	16.906.025	16.905.792	16.908.402
B	**11.216.876**	AMJ4802 12V 1,6kW	-	-	-	16.361.344	16.915.609	-	16.915.233
B	**11.216.877**	AMJ4803 24V 1,5kW	-	-	-	16.361.345	16.915.609	-	16.915.233
A	**11.216.878**	AMJ 5856 24V 2,2kW	16.915.862	16.907.943	-	16.363.042	16.908.474	-	16.906.150
E	**11.216.879**	AMK 4690 24V 4,0kW	16.285.735	16.906.774	-	16.362.813	16.907.608	-	16.300.125
A	**11.216.882**	AMJ5858 24V 2,2kW	-	16.907.943	-	16.362.628	16.908.474	-	16.907.954
B	**11.216.883**	AMJ5859 24V 2,2kW	-	16.905.699	-	16.361.086	16.908.474	-	16.906.150
C	**11.216.891**	AMJ4806 12V 1,0kW	16.915.712	16.905.699	-	16.362.803	16.908.474	-	16.915.713
C	**11.216.892**	AMJ4807 24V 1,0kW	16.915.712	16.905.699	-	16.362.802	16.908.474	-	16.915.713
B	**11.216.893**	AMJ4808 12V 1,5kW	16.915.712	16.905.699	-	16.363.071	16.908.474	-	16.915.713
B	**11.216.894**	AMJ4809 24V 1,5kW	16.915.712	16.905.699	-	16.362.802	16.908.474	-	16.915.713
I	**11.216.896**	AMT4668 48V 9,1kW	16.908.683	16.908.189	-	16.908.684	16.908.194	16.908.191	-
D	**11.216.900**	AMK5564 24V 3,0kW	16.285.739	16.905.263	-	16.906.047	16.906.025	16.905.536	16.908.402
A	**11.216.902**	AMJ5862 12V 1,6kW	-	16.907.943	-	16.361.674	16.908.630	-	16.906.150
A	**11.216.903**	AMJ4810 24V 2,2kW	-	16.907.943	-	16.362.066	16.908.630	-	16.907.940
A	**11.216.904**	AMJ5863 24V 2,2kW	-	16.907.943	-	16.908.155	16.906.374	-	16.906.414
B	**11.216.909**	AMJ5864 24V 2,1kW	15.130.602	16.905.263	-	16.905.679	16.905.611	-	16.905.680
B	**11.216.910**	AMJ5865 12V 2,1kW	15.130.602	16.905.263	-	16.905.683	16.905.611	-	16.905.680
A	**11.216.914**	AMJ 5866 24V 2,2kW	-	16.905.699	-	16.361.645	16.905.611	-	16.905.534
G	**11.216.915**	AMP4539 48V 3,7kW	15.131.613	16.906.671	-	16.360.962	16.906.672	16.915.599	-
B	**11.216.917**	AMJ4811 24V 2,2kW	-	16.905.699	-	16.362.184	16.905.163	-	16.906.454
F	**11.216.918**	AMK2635 24V 3,0kW	-	16.905.699	16.915.589	16.362.581	16.907.608	-	-
E	**11.216.919**	AMK5563 24V 3,0kW	-	16.905.699	-	16.362.986	16.907.608	-	16.915.658
A	**11.216.925**	AMJ5868 24V 2,2kW	16.283.390	16.905.263	-	16.908.597	16.908.080	-	16.905.534
B	**11.216.961**	AMJ5878 12V 1,5kW	16.283.516	16.906.517	-	16.908.792	16.915.609	16.905.536	16.908.793

8	9	10	11	12	13	14	15	16
16.282.380	-	16.915.111	16.907.600	16.902.157	16.907.942	-	-	-
16.282.582	-	16.907.846	16.907.847	-	16.283.988	-	-	-
16.282.842	-	16.915.424	16.906.026	-	15.132.982	-	16.915.889	-
16.282.244	-	-	16.906.096	-	16.908.854	-	16.906.591	-
16.282.874	-	-	16.907.288	-	16.907.287	-	16.906.591	-
16.915.421	16.908.424	16.907.744	16.907.743	-	16.908.426	16.906.678	16.908.427	-
16.282.855	-	-	16.905.677	-	16.915.640	-	16.908.794	-
16.915.808	-	16.908.957	16.908.958	-	15.133.545	15.421.058	16.915.590	-
16.282.014	-	16.915.111	16.908.051	16.902.157	16.908.966	-	-	-
16.282.886	-	16.915.634	16.907.600	-	16.915.635	-	-	-
16.282.454	-	16.907.821	16.907.600	16.902.157	16.908.966	-	-	-
16.282.869	-	-	16.915.736	-	16.915.737	-	16.906.290	16.915.738
16.282.178	-	-	16.906.026	-	16.908.403	-	16.908.404	-
16.280.716	-	-	16.905.677	16.912.346	16.908.018	-	16.906.542	-
16.280.717	-	-	16.906.457	16.912.346	16.908.019	-	16.906.542	-
16.280.898	-	16.907.599	16.907.600	-	16.907.229	-	-	16.915.863
16.915.904	-	16.915.906	16.907.983	16.912.486	15.133.052	-	16.915.907	-
16.282.617	-	16.915.634	16.907.600	-	16.907.955	-	-	-
16.282.454	-	16.907.821	16.907.600	16.902.153	16.908.966	-	-	-
16.282.906	-	-	16.905.677	-	16.908.276	-	16.915.662	-
16.282.907	-	-	16.906.457	-	16.906.458	-	16.915.662	-
16.282.908	-	-	16.905.677	-	16.908.276	-	16.915.662	-
16.282.907	-	-	16.906.457	-	16.906.458	-	16.915.662	-
16.907.097	16.908.686	16.915.739	16.915.386	16.912.414	16.908.689	16.908.700	16.908.198	-
16.282.178	-	-	16.906.026	-	16.908.403	-	16.908.404	-
16.282.275	-	16.906.471	16.907.602	16.902.894	16.908.966	-	-	-
16.282.969	-	16.907.932	16.907.600	-	16.285.652	-	-	-
16.282.217	-	16.907.599	16.907.600	-	16.281.771	-	-	16.907.696
16.280.287	-	-	16.908.090	-	16.908.851	-	16.906.867	16.907.622
16.282.283	-	-	16.906.096	-	16.908.853	-	16.906.867	16.915.814
16.282.256	-	16.906.472	16.906.463	16.902.157	16.283.126	-	-	-
16.280.824	16.906.675	16.907.741	16.907.740	16.912.539	16.906.676	16.906.678	16.915.836	-
16.282.502	-	-	16.906.096	-	16.906.587	-	16.906.591	-
16.907.981	-	16.907.982	16.907.983	-	15.132.499	-	16.915.592	-
16.282.865	-	16.907.616	16.908.260	16.912.513	15.132.179	-	16.915.837	-
16.282.049	-	16.908.598	16.908.599	-	16.283.753	-	-	-
16.282.319	-	-	16.906.455	-	16.908.276	-	16.908.794	-

EN Figures

DE Bilder

FR Figures

IT Figure

A

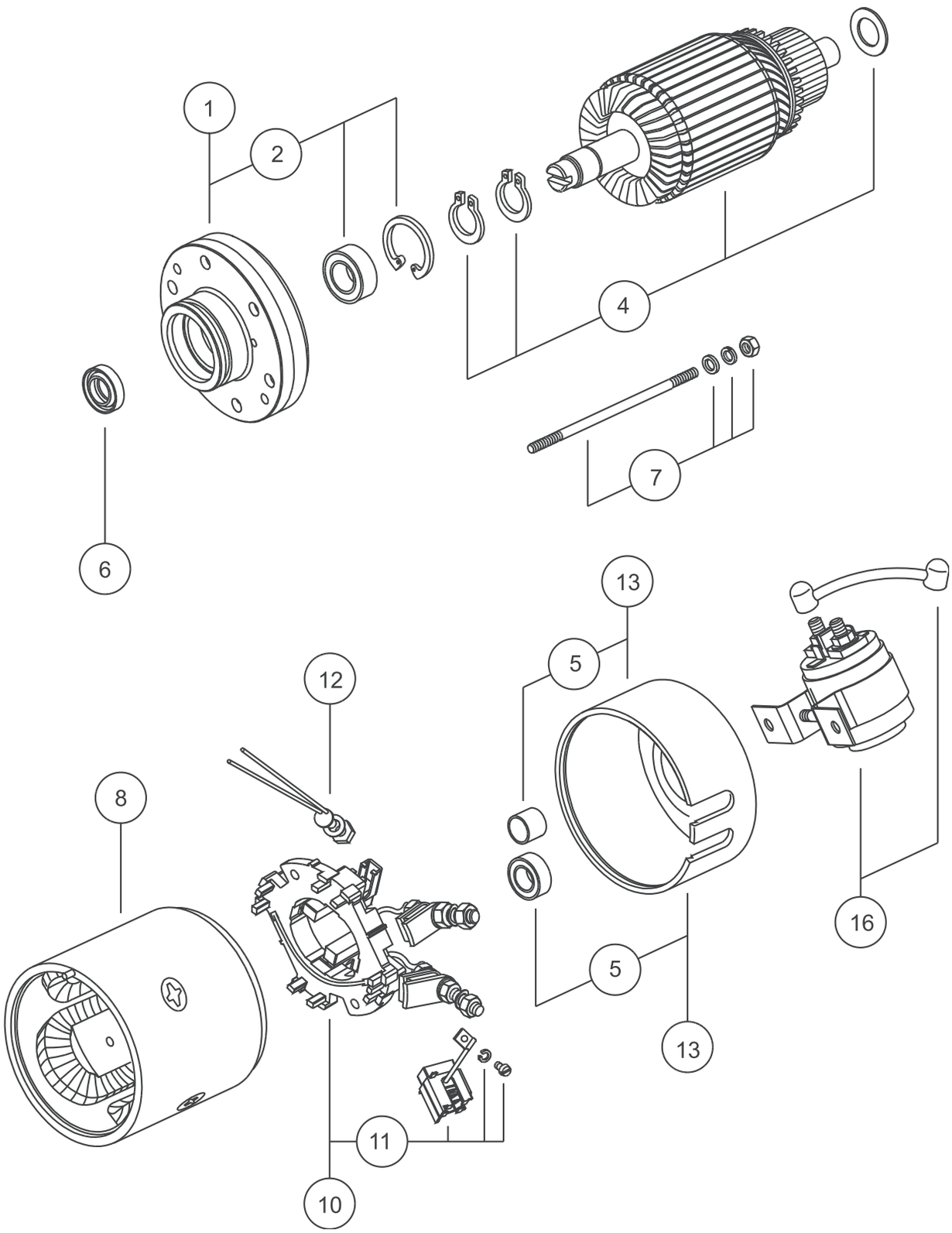

B

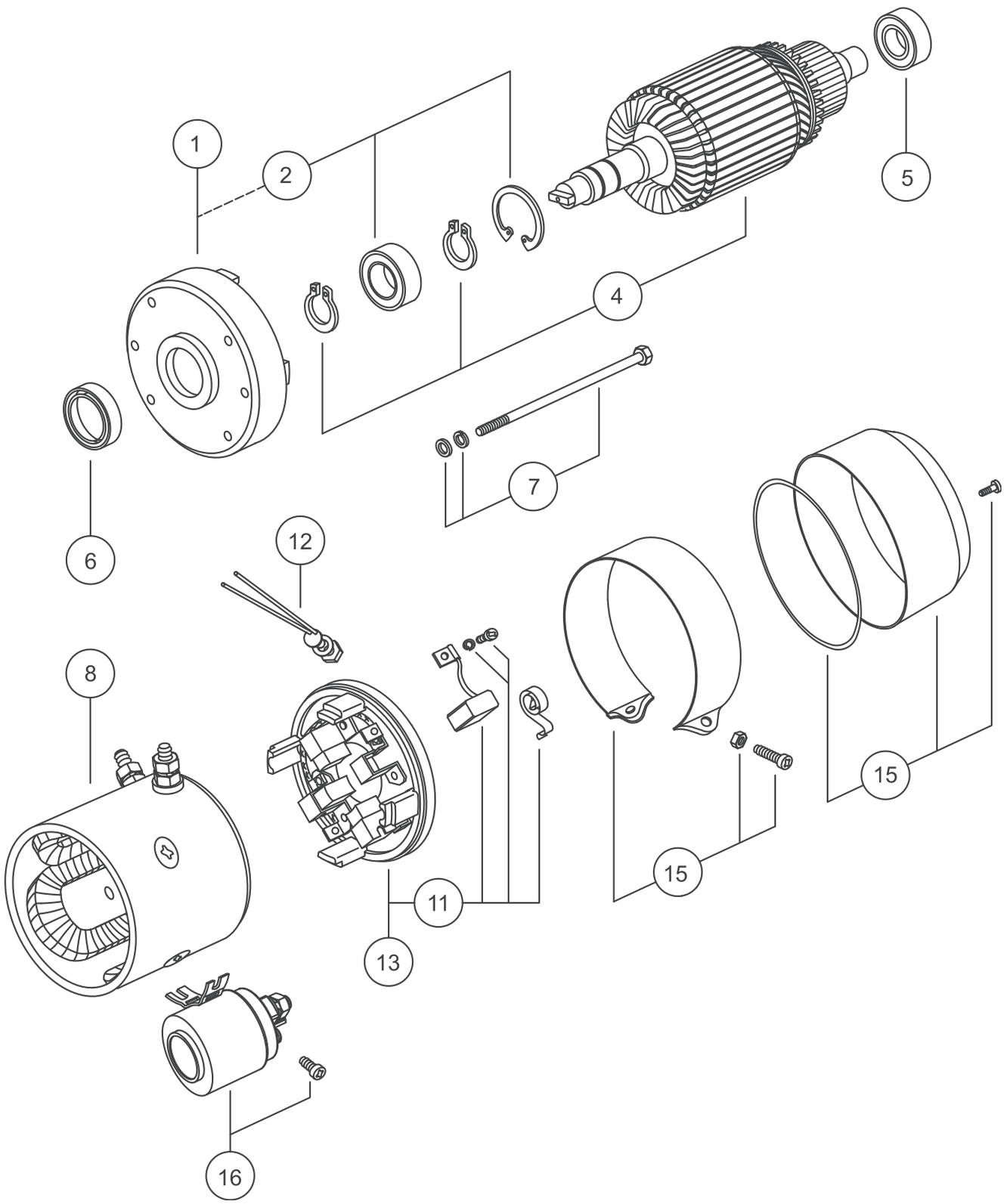

C

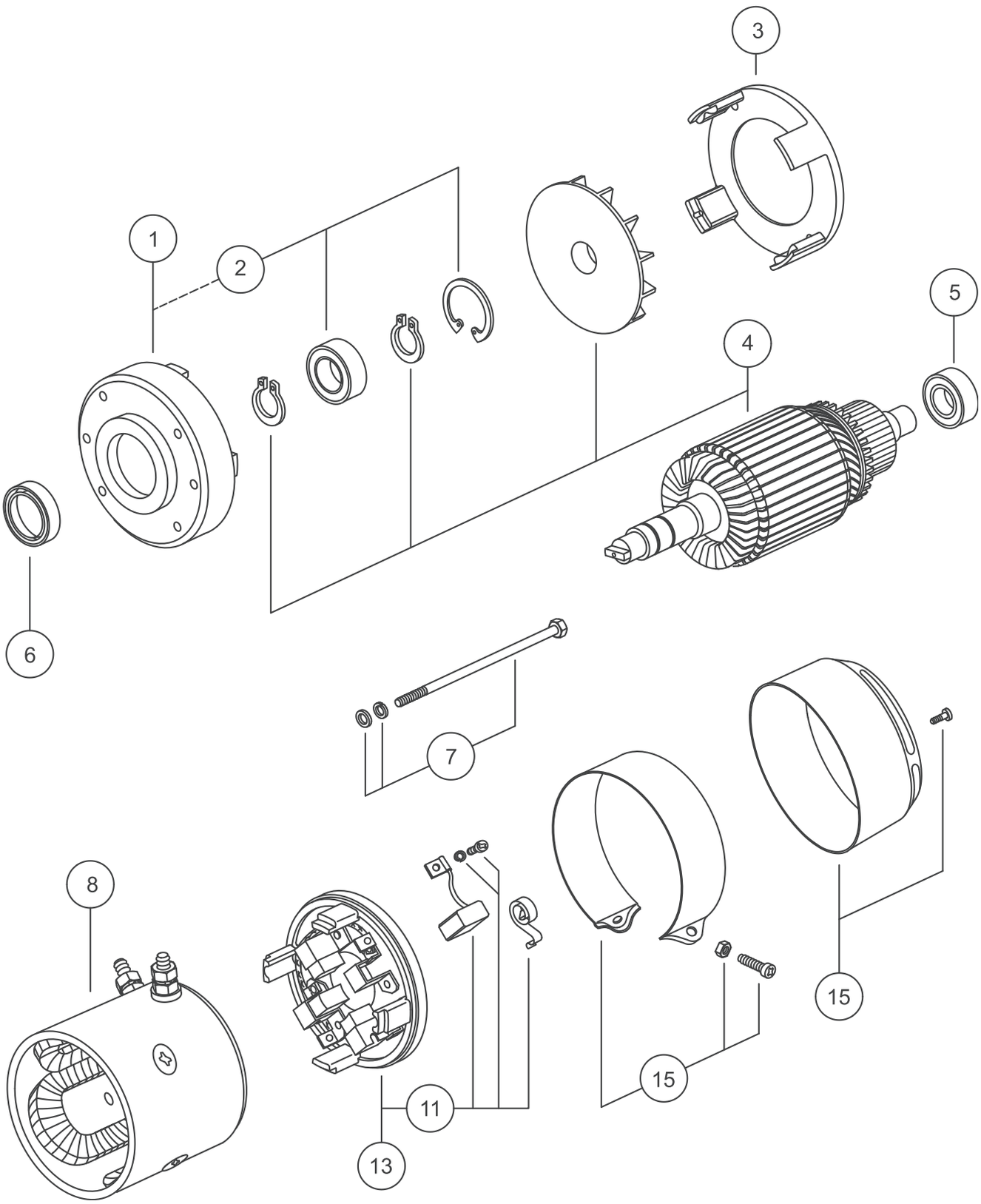

D

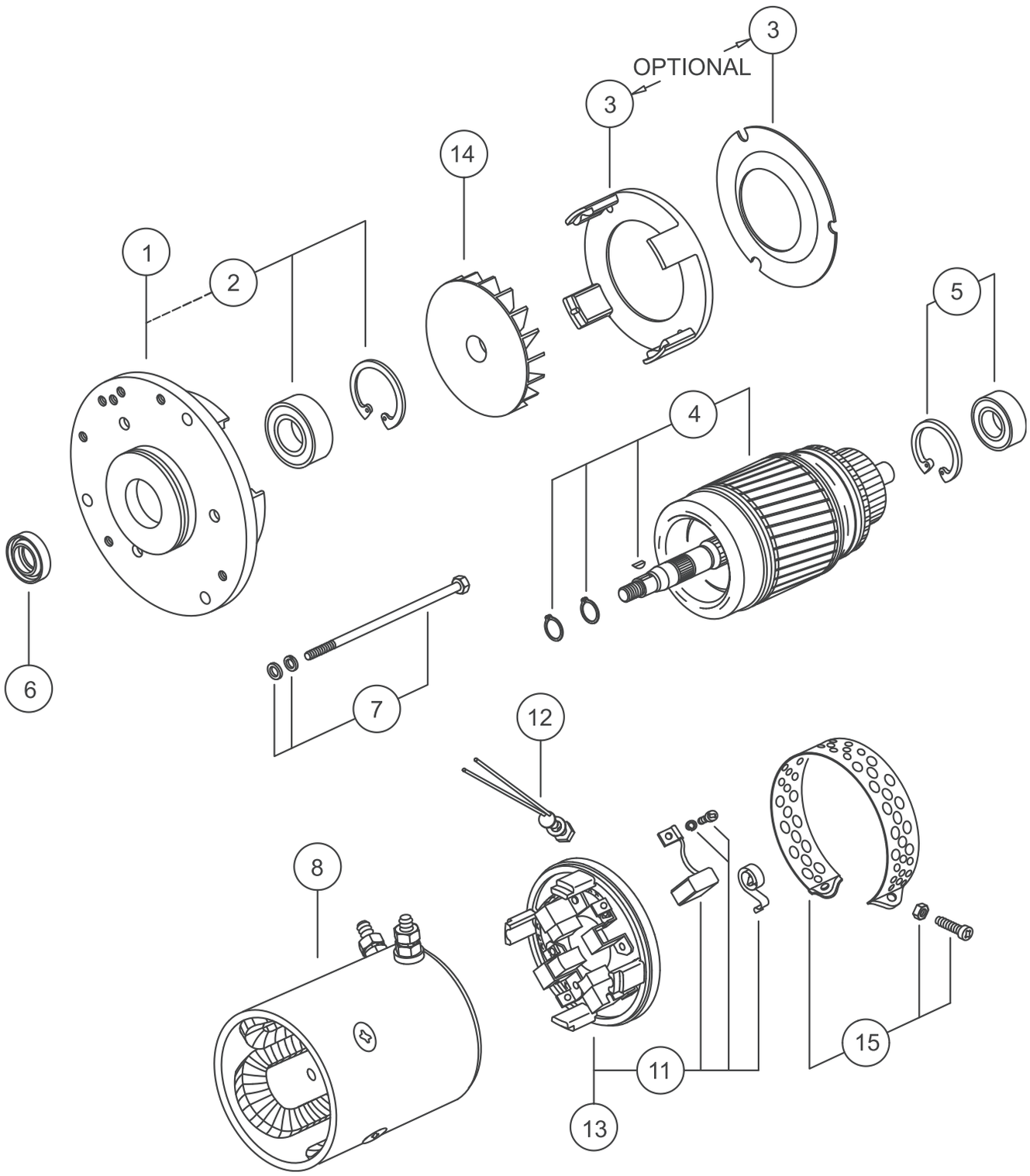

E

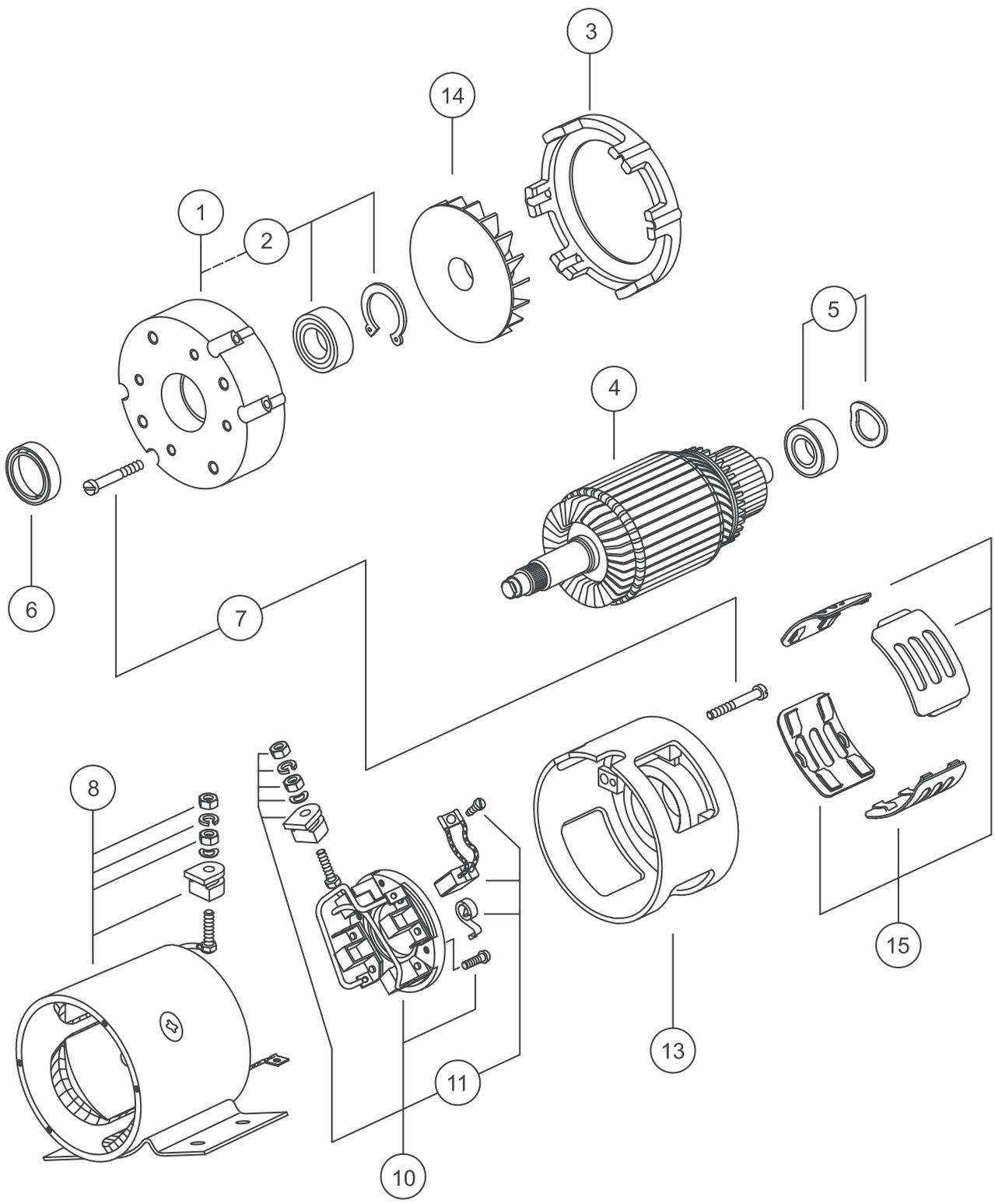

F

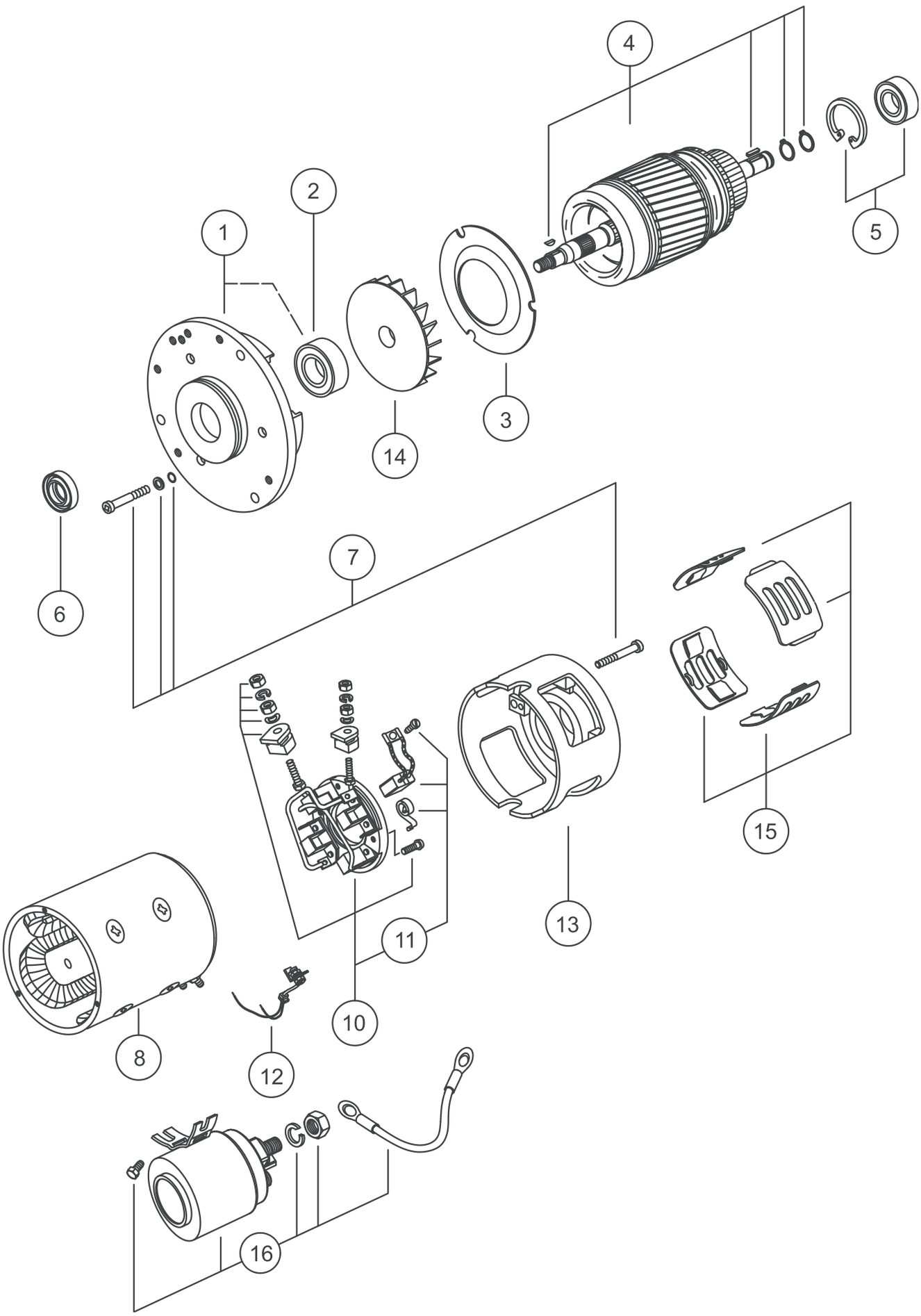

G

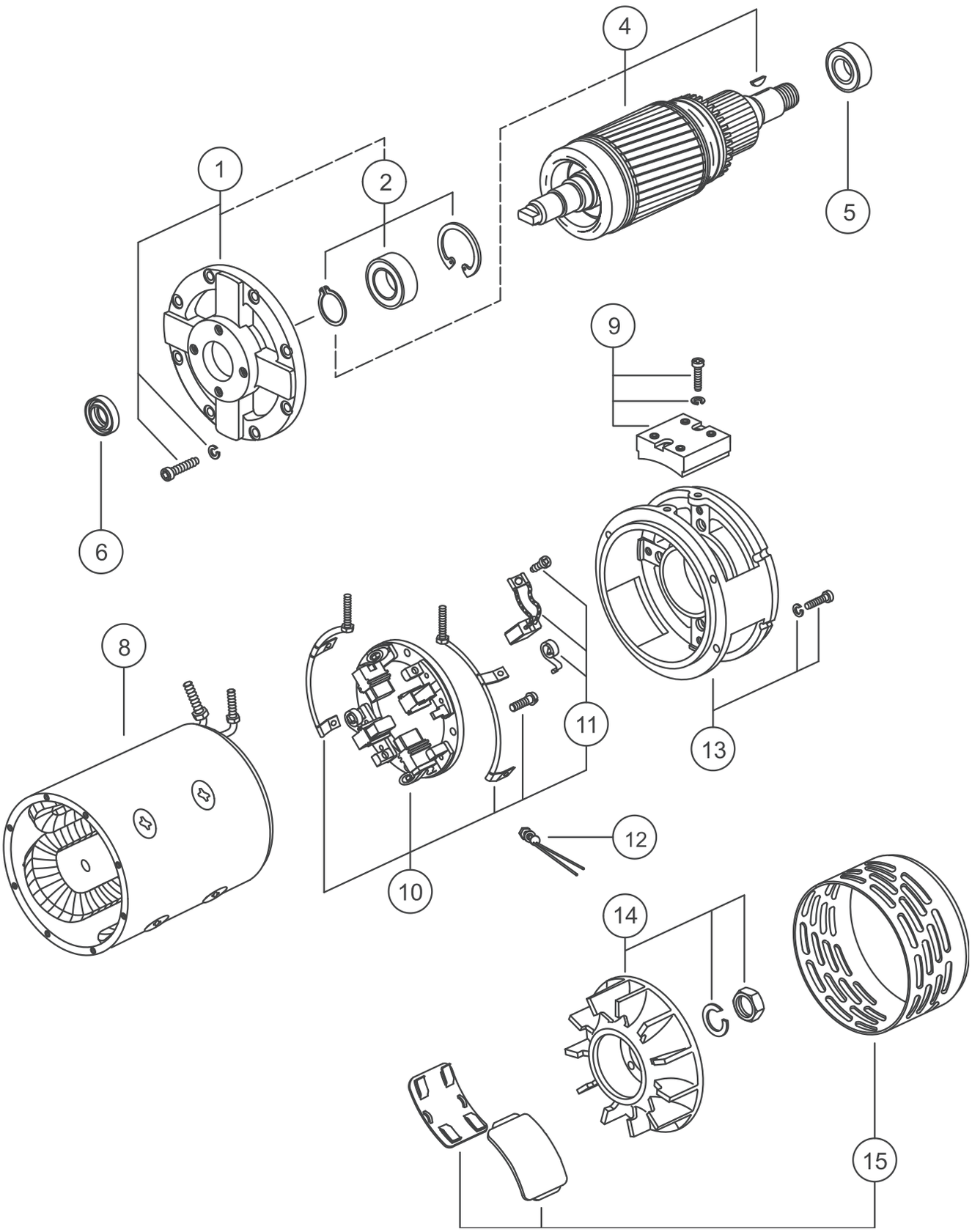

H

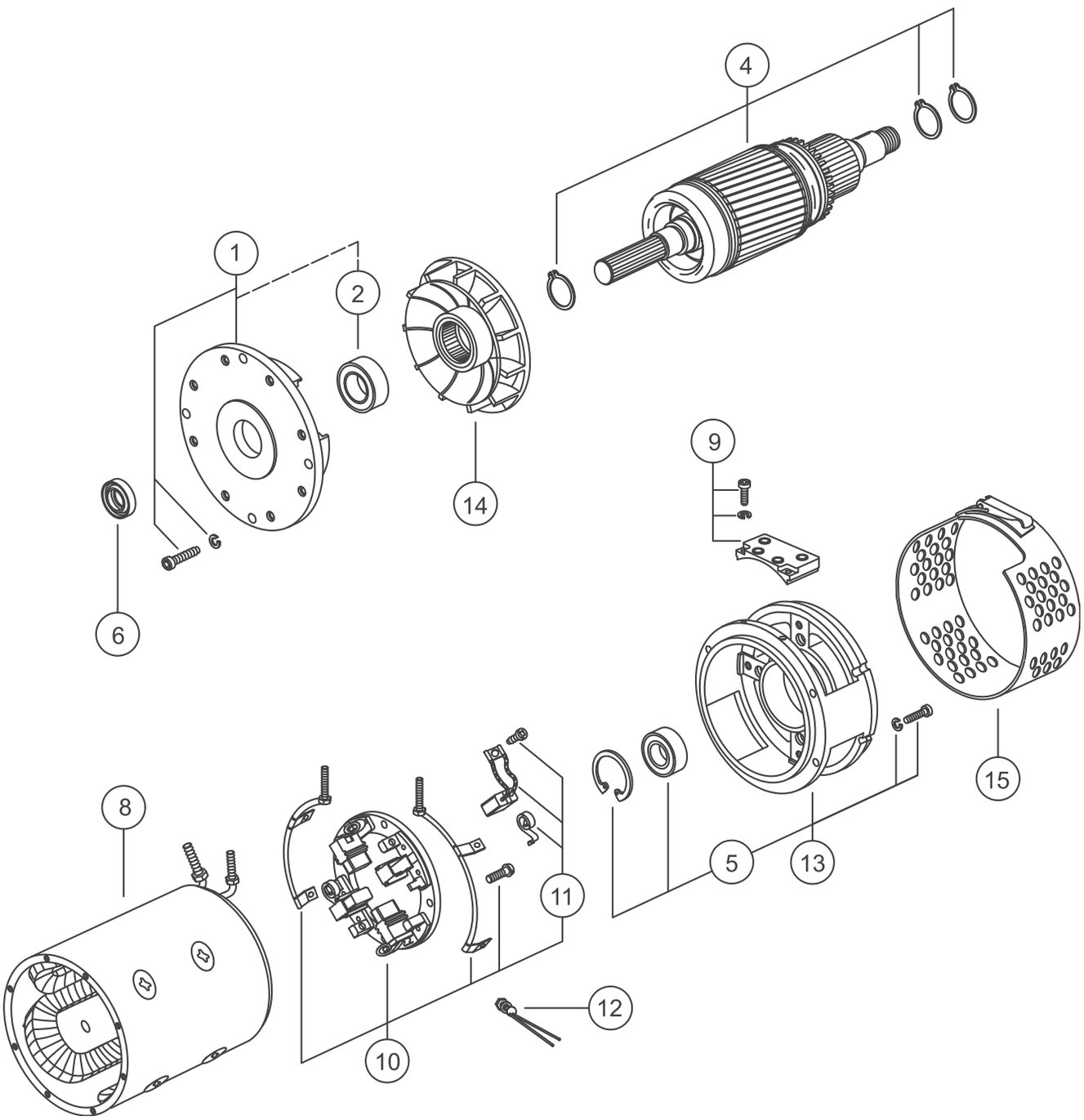

I